Origin200™ and Origin™ Vault Installation Instructions

Document Number 108-0153-001

CONTRIBUTORS

Written by Kameran Kashani and Carolyn Curtis
Illustrated by Francesca Angelesco, Cheri Brown, Dan Young, and Kameran Kashani
Production by Mike Dixon
Engineering contributions by Jeffery Heller, Dave Parry, Ken Hibbard, Ron Weiss, Eric Williams, Demick Boyden, Steve Smithson, Dilip Amin, Richard Wright, Brad Morrow, Tim Wong, Tom Jackman, and Carl Strasen.

© 1996, Silicon Graphics, Inc.— All Rights Reserved

The contents of this document may not be copied or duplicated in any form, in whole or in part, without the prior written permission of Silicon Graphics, Inc.

RESTRICTED RIGHTS LEGEND

Use, duplication, or disclosure of the technical data contained in this document by the Government is subject to restrictions as set forth in subdivision (c) (1) (ii) of the Rights in Technical Data and Computer Software clause at DFARS 52.227-7013 and/or in similar or successor clauses in the FAR, or in the DOD or NASA FAR Supplement. Unpublished rights reserved under the Copyright Laws of the United States. Contractor/manufacturer is Silicon Graphics, Inc., 2011 N. Shoreline Blvd., Mountain View, CA 94043-1389.

Silicon Graphics , the Silicon Graphics logo, Indigo, CHALLENGE, and Onyx are registered trademarks and O2, Origin, Origin200, CrayLink, XFS, IRIS InSight, Onyx², POWER Series, Indigo², and IRIX are trademarks of Silicon Graphics, Inc. Indy is a registered trademark, used under license in the U.S. and owned by Silicon Graphics, Inc. in other countries worldwide. Macintosh is a trademark of Apple Computer, Inc., registered in the U.S.A. and other countries. IBM is a registered trademark of International Business Machines Corporation. Windows and MS-DOS are registered trademark of Microsoft Corporation. FrameMaker is a trademark of Frame Technology Corporation. UNIX is a regstered trademark in the United States and other countries, licensed exclusively through X/Open Company, Ltd. PostScript is a registered trademark of Adobe Systems, Inc.

FCC Warning

This equipment has been tested and found compliant with the limits for a Class A digital device, pursuant to Part 15 of the FCC rules. These limits are designed to provide reasonable protection against harmful interference when the equipment is operated in a commercial environment. This equipment generates, uses, and can radiate radio frequency energy and, if not installed and used in accordance with the instruction manual, may cause harmful interference to radio communications. Operation of this equipment in a residential area is likely to cause harmful interference in which case the user will be required to correct the interference at his own expense.

Attention

This product requires the use of external shielded cables in order to maintain compliance pursuant to Part 15 of the FCC Rules.

International Special Committee on Radio Interference (CISPR)

This equipment has been tested to and is in compliance with the Class A limits per CISPR publication 22, Limits and Methods of Measurement of Radio Interference Characteristics of Information Technology Equipment; Germany's BZT Class A limits for Information Technology Equipment; and Japan's VCCI Class 1 limits.

Canadian Department of Communications Statement

This digital apparatus does not exceed the Class A limits for radio noise emissions from digital apparatus as set out in the Radio Interference Regulations of the Canadian Department of Communications.

Attention

Le présent appareil numérique n'émet pas de perturbations radioélectriques dépassant les normes applicables aux appareils numériques de Classe A prescrites dans le Règlement sur le interferences radioélectriques établi par le Ministère des Communications du Canada.

この装置は、第一種情報装置（商工業地域において使用されるべき情報装置）で商工業地域での電波障害防止を目的とした情報処理装置等電波障害自主規制協議会(VCCI)基準に適合しております。
従って、住宅地域またはその隣接した地域で使用すると、ラジオ、テレビジョン受信機等に受信障害を与えることがあります。
取扱説明書に従って正しい取り扱いをして下さい。

CE

NRTL/C

TUV GS geprüfte Sicherheit

Contents

About This Guide ..... **xix**

Audience xix

Structure of This Guide xix

1. Origin200: Overview and Theory of Operations **1-1**

1.1 Installation Options: Tower and Rackmounting 1-3

1.2 Multimodule Grounding and Site Preparation 1-4

1.3 Feature Summary 1-4

1.4 Logic Carrier 1-5

1.4.1 Main System Board 1-6

1.4.2 CPU Daughter Card 1-7

1.4.3 Module System Controller (MSC) 1-8

1.4.4 PCI Backplane and Expansion Slots 1-8

1.5 Memory 1-9

1.6 Internal Drive Options and SCSI Channels 1-10

1.6.1 5.25-Inch Drives and Drive Bay 1-11

1.6.2 3.5-Inch Drives and Drive Bay 1-11

1.6.3 SCSI Channels and Channel Numbering 1-12

1.7 Serial Ports 1-13

1.8 Parallel Port 1-13

1.9 Ethernet Port 1-13

1.10 Power Supply 1-14

1.11 Air Flow and Fans 1-14

1.12 Physical and Environmental Specifications 1-15

2. Origin Vault: Overview and Theory of Operations **2-1**

2.1 Origin Vault Versions 2-1

2.2 Internal Drive Options and SCSI Channels 2-3

2.2.1 3.5-Inch Drives 2-6

2.2.2 5.25-Inch Drives 2-8

2.2.3 Drive LEDs 2-8

2.3 Proper Operating Conditions 2-8
2.4 Technical Specifications 2-9

3. Setting Up an Origin200 System 3-1
3.1 Choosing a Location For the Server 3-1
3.2 Putting the Pieces Together 3-2
3.2.1 Overview of the System Connectors and Ports 3-4
3.2.2 Safety Considerations 3-5
3.2.3 Assembling the Server 3-6
3.2.4 Installing 3.5-Inch Drives 3-6
3.2.5 Installing 5.25-Inch Drives 3-9
3.2.6 Attaching an Ethernet Networking Cable 3-15
3.2.7 Attaching the System Console 3-16
3.2.8 Connecting Two Origin200 Modules 3-16
3.3 Turning On the System 3-22

4. Setting Up an Origin Vault Expansion Option 4-1
4.1 Safety Considerations 4-1
4.2 Choosing a Location for the Origin Vault Tower 4-2
4.3 Unpacking the Origin Vault 4-2
4.4 Jumpering the 3.5-Inch SCSI Device ID Range 4-3
4.5 Installing the Origin Vault Enclosure in the Rack 4-7
4.5.1 Attaching Mounting Hardware to the Enclosure 4-7
4.5.2 Installing Rails in the Rack 4-8
4.5.3 Securing the Enclosure in the Rack 4-11
4.5.4 Cabling the Enclosure 4-12
4.6 Installing 3.5-Inch Drives 4-17
4.7 Installing 5.25-Inch Options 4-19
4.7.1 Preparing the Peripheral Carrier 4-20
4.7.2 Installing the Drive(s) and the Peripheral Carrier 4-22
4.8 Cabling the Tower 4-24
4.9 Turning On the Origin Vault Expansion Option 4-27
4.10 Verifying Drive Installation 4-28
4.11 Configuring Drives 4-29

5. Installing an Origin200 System in a Rack 5-1
5.1 Overview 5-1
5.2 Installing the Mounting Hardware on the Chassis 5-2
5.3 Installing a Chassis In the Rack 5-6
5.4 Removing a Server From an Equipment Rack 5-8

6. Origin200 Server Operations 6-1

6.1 Front Panel Functions: Status LED, Power, Reset, NMI 6-1

6.1.1 Status LED 6-2

6.1.2 Front Power Switch 6-2

6.1.3 Using the Reset Button 6-2

6.1.4 Using the Nonmaskable Interrupt (NMI) Button 6-3

6.2 Turning the System On and Off 6-3

6.2.1 About the Master Power Switch and Front Power Switch 6-3

6.2.2 Turning On the System 6-4

6.2.3 Turning Off the System 6-6

6.3 Accessing the Server Over the Web 6-8

6.4 Using Another Computer or Workstation as the System Console 6-9

6.4.1 Using An IBM-Compatible Or Macintosh Computer As the System Console 6-9

6.4.1.1 Obtaining and Connecting the Correct Serial Adapter Cable 6-10

6.4.1.2 Setting Up and Starting the Terminal Emulator 6-11

6.4.1.3 Logging In To the Server 6-12

6.4.2 Using a A Silicon Graphics Workstation As the System Console 6-13

6.4.2.1 Obtaining the Correct Serial Cable 6-13

6.4.2.2 Checking for the Correct Software 6-13

6.4.2.3 Configuring the Workstation 6-14

6.4.2.4 Connecting the Serial Cable 6-15

6.4.2.5 Logging In To the Server 6-15

6.5 Using the AUX Port and Module System Controller Commands 6-16

6.5.1 Attaching a Terminal Or Modem to the AUX Port 6-16

6.5.2 Using the Module System Controller 6-17

6.5.2.1 Entering Supervisor Mode 6-17

6.5.2.2 Setting the MSC Password 6-18

6.5.2.3 Checking the System Temperature 6-18

6.5.2.4 Checking and Setting the Fan Speed 6-18

6.5.2.5 Checking If the System Is On or Off 6-19

6.5.2.6 Powering the System On and Off 6-19

6.5.2.7 Resetting the System 6-19

6.5.2.8 MSC Error Messages 6-20

6.5.2.9 MSC Command Reference 6-20

6.6 Determining What Devices are Installed On the Server 6-21
6.6.1 How Devices are Detected and Numbered 6-21
6.6.2 How to Use the Hardware Graph 6-22
6.7 Removing and Replacing the System Cover and Chassis Access Panel 6-24
6.8 Locking the System 6-26
6.8.1 Locking the Front Door 6-26
6.8.2 Locking the Chassis 6-26
6.9 Adjusting the Feet 6-27

7. Installing and Removing Memory 7-1
7.1 Handling Precautions 7-1
7.2 About Origin200 Memory 7-1
7.3 Installing Memory 7-2
7.4 Verifying That Installed Memory Is Recognized By The System 7-7
7.5 Removing Memory 7-7

8. Installing and Removing PCI Option Boards 8-1
8.1 Handling Precautions 8-1
8.2 Installing a PCI Option Board 8-1
8.3 Removing a PCI Option Board 8-7

9. Installing and Configuring Peripherals 9-1
9.1 Installing, Removing, and Configuring 5.25-Inch Peripherals 9-1
9.1.1 About the 5.25-Inch Peripheral Bay 9-1
9.1.2 Configuring a 5.25-Inch Peripheral 9-3
9.1.3 Installing a 5.25-Inch Peripheral 9-3
9.1.4 Removing 5.25-Inch Peripherals 9-7
9.2 Installing, Removing, and Configuring 3.5-Inch Peripherals 9-11
9.2.1 About the 3.5-Inch Peripheral Bay 9-12
9.2.2 Configuring 3.5-Inch Peripherals 9-12
9.2.3 Installing a 3.5-Inch Peripheral 9-13
9.2.4 Removing a 3.5-Inch Peripheral 9-16
9.3 Verifying That A Drive Is Installed Correctly 9-18
9.4 Using Drives In the Origin200 9-19
9.5 Attaching Serial Devices 9-20
9.5.1 Attaching Serial Cables 9-22
9.5.2 Attaching Serial (ASCII) Terminals 9-22
9.5.3 Connecting a Modem 9-25
9.5.4 Useful Serial Commands 9-25

10. Troubleshooting 10-1
10.1 Status LED Messages 10-1
10.2 Ethernet Status LED Messages 10-2
10.3 Checking the Power Supply 10-2

11. Removing and Replacing Internal Parts 11-1
11.1 Tools Required to Remove and Replace Components 11-1
11.2 Miscellaneous Fasteners 11-2
11.3 Preparing the Origin200/Origin Vault for Servicing 11-2
11.4 Replacing the SCSI Backplane 11-3
11.4.1 Installing A New SCSI Backplane 11-4
11.5 Replacing Fans 11-5
11.5.1 Installing a New Fan 11-6
11.6 Replacing the Module System Controller 11-6
11.6.1 Installing a New Module System Controller 11-9
11.7 Replacing the Logic Carrier 11-10
11.7.1 Installing a New Logic Carrier 11-14
11.8 Replacing the Differential/Single-Ended Converter Board 11-19
11.8.1 Installing a New Differential/Single-Ended Converter Board 11-22
11.9 Checking and Replacing the Origin200 Power Supply 11-22
11.9.1 Installing a New Power Supply In the Origin200 Server 11-24
11.10 Checking and Replacing the Origin Vault Power Supply 11-25
11.10.1 Installing a New Power Supply In the Origin Vault Expansion Option 11-28

A. Connector Pinout Assignments A-1
A.1 Serial Ports A-2
A.2 Parallel Port A-3
A.3 Ethernet Port A-4
A.4 AUX Port A-5
A.5 Single-Ended SCSI (Origin Vault) A-6
A.6 Differential SCSI (Origin Vault) A-7

B. Cable Descriptions B-1

B.1 Serial Cables B-1

B.1.1 Printer/Character (ASCII) Terminal Cable B-1

B.1.2 Modem Cable (Full-Handshake) B-2

B.1.3 Origin200 to Indy and Indigo2 Cable (DB-9 to DIN-8) B-2

B.1.4 Origin200 to O2, Onyx2, and IBM-Compatible (DB-9 to DB-9) B-3

B.1.5 Origin200 to Onyx (DB-9 to DB-9) B-4

B.1.6 Origin200 to Macintosh Cable (DB-9 to DIN-8) B-4

B.2 AUX Port Cables B-5

B.2.1 AUX Port Terminal Cable B-5

B.2.2 AUX Port Modem Cable B-5

Figures

Figure 1-1 Two-module Origin200 System, Front View 1-1
Figure 1-2 Two-module Origin200 System, Rear View 1-2
Figure 1-3 Two-module Origin200 Server in a Rack 1-3
Figure 1-4 Logic Carrier Assembly 1-6
Figure 1-5 The Origin200 Main System Board and CPU Daughter Card 1-7
Figure 1-6 PCI Backplane and Slot IDs 1-9
Figure 1-7 Layout of DIMM Sockets on the Origin200 Main System Board 1-10
Figure 1-8 Origin200 5.25-inch Peripheral Carrier and Drive Bay 1-11
Figure 1-9 Origin200 3.5-inch Drive, Sled, and Bay 1-12
Figure 1-10 Air Flow Through Origin200 1-14
Figure 2-1 Origin Vault Standalone Tower, Front View 2-2
Figure 2-2 Example Rackmounted Origin Vault Enclosure 2-3
Figure 2-3 Drive Bay Locations 2-4
Figure 2-4 Origin Vault Standalone Tower Rear View 2-5
Figure 2-5 Origin Vault Rackmountable Enclosure Rear View 2-6
Figure 2-6 3.5-Inch Drive, Sled, and Bay 2-7
Figure 3-1 Minimum Clearances for Origin200, Tower Configuration 3-2
Figure 3-2 Basic Items Included With the Origin200, Tower Configuration 3-3
Figure 3-3 Basic Items Included With the Origin200, Rack-Mountable Configuration 3-4
Figure 3-4 Origin Connectors 3-5
Figure 3-5 SCSI Drive ID Numbering for 3.5-Inch Drives 3-7
Figure 3-6 Installing 3.5-Inch Drives in Origin200 3-8
Figure 3-7 Removing the 5.25-Inch Peripheral Carrier 3-9
Figure 3-8 Removing a Blanking Plate and the Rear Access Plate from the Peripheral Carrier 3-10
Figure 3-9 Inserting a 5.25-Inch Drive in the Peripheral Carrier 3-11
Figure 3-10 Attaching a Power Connector to a 5.25-inch Drive 3-12
Figure 3-11 Attaching the SCSI Cable to a 5.25-Inch Drive 3-12
Figure 3-12 Replacing the Rear Access Plate on the Peripheral Carrier 3-13
Figure 3-13 Replacing the 5.25-Inch Peripheral Carrier 3-14

Figure 3-14 Attaching an Ethernet Networking Cable to An Origin200 module 3-15
Figure 3-15 Attaching the Serial Cable 3-16
Figure 3-16 Removing the Side Panel of the Second (Slave) Module 3-17
Figure 3-17 Removing the Module System Controller (MSC) Access Plate 3-18
Figure 3-18 MSC DIP Switch Location and Settings 3-19
Figure 3-19 Attaching the Grounding Cable 3-20
Figure 3-20 Attaching the CrayLink Interconnect Cable 3-21
Figure 3-21 Turning On the Master Power Switch 3-22
Figure 3-22 Turning On the Front Power Switch 3-23
Figure 4-1 Rackmountable Origin Vault Option 4-3
Figure 4-2 Removing Tower Side Panels 4-4
Figure 4-3 Removing the Origin Vault Cover 4-5
Figure 4-4 Attaching the Grounding Strap 4-5
Figure 4-5 SCSI Device ID Resetting Pins 4-6
Figure 4-6 Setting 3.5-Inch Drive Device Numbering to 9 through 14 4-6
Figure 4-7 Mounting Ears 4-7
Figure 4-8 Attaching Rackmounting Hardware 4-8
Figure 4-9 Example Origin Vault Enclosure in Origin Rack 4-9
Figure 4-10 Example Rail Placement for Origin Vault in Origin Rack 4-10
Figure 4-11 Lifting the Origin Vault Enclosure Into a Rack 4-11
Figure 4-12 Attaching End Caps (21-Inch Rack) 4-12
Figure 4-13 Origin Vault Rackmountable Enclosure Rear View 4-13
Figure 4-14 Connecting the Rackmount Power Cable 4-14
Figure 4-15 Connecting the Rackmount SCSI Cable to an Origin2000 Host 4-15
Figure 4-16 Connecting the Rackmount SCSI Cable to a Host (Not in Same Rack) 4-16
Figure 4-17 Turning Off the Master Power Switch 4-17
Figure 4-18 Removing a Blanking Panel for a 3.5-Inch Drive 4-18
Figure 4-19 Inserting a 3.5-inch Drive, Standalone Tower 4-18
Figure 4-20 Inserting a 3.5-inch Drive, Rackmountable Enclosure 4-19
Figure 4-21 Unscrewing the Peripheral Carrier 4-20
Figure 4-22 Removing Peripheral Carrier EMI Shielding Plate 4-21
Figure 4-23 Removing a Peripheral Carrier Blanking Plate 4-21
Figure 4-24 Attaching a Power Cable Connector to a Peripheral Inside the Carrier (Example) 4-22
Figure 4-25 Attaching a SCSI Connector to a Peripheral Inside the Carrier (Example) 4-23
Figure 4-26 Securing a Peripheral in the Carrier 4-23
Figure 4-27 Inserting the Peripheral Carrier Into the 5.25-Inch Bay 4-24
Figure 4-28 Origin Vault Standalone Tower Rear View 4-25

Figure 4-29 Origin Vault and Origin2000 Host 4-26
Figure 4-30 Origin Vault and Origin200 Host 4-27
Figure 4-31 Master Power Switch 4-28
Figure 5-1 Placing the Origin200 on a Work Surface 5-3
Figure 5-2 Origin200 Rack Mounting Ears 5-4
Figure 5-3 Attaching the Rack Mounting Hardware (Ears) 5-5
Figure 5-4 Lifting the Origin200 Server Into a Rack 5-7
Figure 5-5 Attaching the Plastic End Caps to a Rack Mounted Server 5-8
Figure 5-6 Removing An Origin200 From a Rack 5-10
Figure 5-7 Placing the Origin200 on a Work Surface 5-11
Figure 6-1 The Origin200 Front Panel 6-2
Figure 6-2 Turning On the Master Power Switch 6-4
Figure 6-3 Turning On the Front Power Switch 6-5
Figure 6-4 Turning Off the Front Power Switch 6-7
Figure 6-5 Turning Off the Master Power Switch 6-8
Figure 6-6 Attaching a Serial Cable To Port 1 of the Origin200 Server 6-10
Figure 6-7 Location of the AUX Port 6-16
Figure 6-8 Example */hw* Filesystem 6-23
Figure 6-9 Removing the Side Panel, Tower Origin200 Server 6-24
Figure 6-10 Opening the Chassis Access Door, Tower Origin200 6-25
Figure 6-11 Locking the Chassis With the Locking Tabs 6-27
Figure 6-12 Adjusting the Feet 6-28
Figure 7-1 Attaching A Grounding Wrist Strap 7-3
Figure 7-2 Locating DIMMs In the Origin200 7-4
Figure 7-3 How DIMM Pairs Are Grouped in Origin200 7-5
Figure 7-4 Installing a DIMM 7-6
Figure 7-5 Attaching A Grounding Wrist Strap 7-8
Figure 7-6 Locating DIMMs In the Origin200 7-9
Figure 7-7 How DIMM Pairs Are Grouped In Origin200 7-10
Figure 7-8 Removing DIMMs 7-11
Figure 8-1 Attaching A Grounding Wrist Strap 8-3
Figure 8-2 Locating the PCI Option Slots 8-4
Figure 8-3 Removing a PCI Slot Blanking Plate 8-5
Figure 8-4 Inserting a PCI Option Board 8-6
Figure 8-5 Attaching A Grounding Wrist Strap 8-8
Figure 8-6 Removing a PCI Option Board Screw and Board 8-9
Figure 8-7 Replacing a PCI Option Blanking Plate and Screw 8-10
Figure 9-1 Location of the 5.25-Inch Drive Bay 9-2
Figure 9-2 5.25-Inch Peripheral Carrier 9-2
Figure 9-3 Removing the 5.25-Inch Peripheral Carrier 9-4
Figure 9-4 Removing a Blanking Plate and the Rear Access Plate from the Peripheral Carrier 9-5

Figure 9-5 Installing a 5.25-Inch Drive in the Peripheral Carrier 9-6
Figure 9-6 Replacing the 5.25-Inch Peripheral Carrier 9-7
Figure 9-7 Removing the Peripheral Carrier 9-8
Figure 9-8 Removing the Rear Access Plate from the Peripheral Carrier 9-9
Figure 9-9 Removing A Drive From the Peripheral Carrier 9-9
Figure 9-10 Replacing the Front Blanking Plate and Rear Access Plate 9-10
Figure 9-11 Replacing the 5.25-Inch Peripheral Carrier 9-11
Figure 9-12 The 3.5-Inch Drive Bay and Correspondence of SCSI IDs to Drive Slots 9-12
Figure 9-13 Example 3.5-Inch Drive Slot Blanking Plate 9-12
Figure 9-14 Opening the Front Door of Origin200 9-13
Figure 9-15 How the 3.5-inch Drives are Numbered in Origin200 9-14
Figure 9-16 Installing a 3.5-inch Peripheral 9-15
Figure 9-17 Opening the Front Door 9-16
Figure 9-18 How the 3.5-inch Drives are Numbered 9-17
Figure 9-19 Removing a 3.5-inch Drive from Origin200 9-18
Figure 9-20 Location of the Serial Port Connectors on Origin200 9-21
Figure 10-1 Ethernet 10-Base-T/100-Base-TX Port LEDs 10-2
Figure 10-2 Location of the Power Supply Test Button and LED (Origin200 Shown) 10-3
Figure 11-1 Removing the Chassis Access Cover 11-3
Figure 11-2 Cable Connections and Spring Clips On the SCSI Backplane 11-4
Figure 11-3 Disconnecting the Fan and Fan Power Cable (Other Components Removed For Clarity) 11-5
Figure 11-4 Removing the Fan From the System 11-6
Figure 11-5 Removing the Front Bezel Crossbar 11-7
Figure 11-6 Removing the System Controller Assembly From the Chassis 11-8
Figure 11-7 Removing the Module System Controller Board From the Carrier 11-9
Figure 11-8 Unfastening the PCI Plenum Divider Sheetmetal 11-10
Figure 11-9 Removing the PCI Plenum Divider 11-11
Figure 11-10 Disconnecting Cables from the Logic Carrier 11-12
Figure 11-11 Unfastening the Logic Carrier 11-13
Figure 11-12 Removing the Logic Carrier 11-14
Figure 11-13 Lowering A Logic Carrier Into the System 11-15
Figure 11-14 Fastening the Logic Carrier 11-16
Figure 11-15 Attaching the Logic Carrier Cables 11-17
Figure 11-16 Installing the PCI Plenum Divider 11-18
Figure 11-17 Fastening the PCI Plenum Divider 11-19
Figure 11-18 Detaching the Converter Board Cables 11-20
Figure 11-19 Unscrewing the Converter Board Carrier 11-21
Figure 11-20 Unscrewing the Converter Board 11-22

Figure 11-21 Removing the Power Supply Screws, Origin200 Server 11-23
Figure 11-22 Removing the Origin200 Server Power Supply 11-24
Figure 11-23 Location of Origin200 Server Power Supply Screws 11-25
Figure 11-24 Removing the Origin Vault Power Supply 11-27
Figure A-1 Origin200 Serial Port Pinout Assignments A-2
Figure A-2 Origin200 Parallel Port Pinout Assignments A-3
Figure A-3 Origin200 Ethernet 10-BASE T/100-BASE T Port Pinout Assignments A-4
Figure A-4 Origin200 AUX Port Pinout Assignments A-5

Tables

Table 1-1	General Features of Origin200	1-4
Table 1-2	Origin200 SCSI Channel Numbers and Characteristics	1-12
Table 1-3	Serial Port Numbers and Correspondence to IRIX Device Files	1-13
Table 1-4	Origin200 Physical and Environmental Specifications	1-15
Table 2-1	Individual Disk Modules	2-7
Table 2-2	Origin Vault Specifications	2-9
Table 2-3	Origin Vault Power Specifications	2-9
Table 2-4	Origin Vault Operating Environment Specification Operating Environment Specifications	2-10
Table 2-5	Characteristics and Types of Drives That Can Be Installed in Origin Vault and Origin200	2-10
Table 2-6	Origin Vault and Origin200 3.5-Inch Disk Drive Specifications	2-11
Table 4-1	Information for Drive Configuration	4-29
Table 6-1	Serial Adapter Cables for Connecting IBM-Compatible and Macintosh Computers To An Origin200 Server	6-10
Table 6-2	Terminal Emulator Settings	6-11
Table 6-3	Module System Controller (MSC) Error Messages	6-20
Table 6-4	Module System Controller (MSC) Commands	6-20
Table 9-1	Sources Of Information For Drive Configuration	9-19
Table 9-2	Serial Port Numbers and Correspondence to IRIX Device Files	9-22
Table 10-1	Status LED Messages	10-1
Table A-1	Origin200 Serial Port Pin Assignments, RS-232 Mode	A-2
Table A-2	Origin200 Serial Port Pin Assignments, RS-422 Mode	A-2
Table A-3	Origin200 Parallel Port Pin Assignments	A-3
Table A-4	Origin200 Ethernet 10-Base-T/100-BASE T Port Pin Assignments	A-4
Table A-5	Origin200 AUX Port Pin Assignments	A-5
Table A-6	Origin Vault 68-Pin Differential High-Density SCSI Pinouts	A-6
Table A-7	Origin Vault 68-Pin Differential High-Density SCSI Pinouts	A-7
Table B-1	Cable Connector Pin Assignments for Printer/Character (ASCII) Terminal Serial Cable	B-1
Table B-2	Cable Connector Pin Assignments for a Modem Cable	B-2
Table B-3	Cable Connector Pin Assignments for an Origin200 To Indy and Indigo2	

Serial Cable B-3
Table B-4 Cable Connector Pin Assignments for an Origin200 To O2, Onyx2, and IBM-Compatible Serial Cable B-3
Table B-5 Cable Connector Pin Assignments for an Origin200 to Onyx Serial Cable B-4
Table B-6 Cable Connector Pin Assignments for an Origin200 to Macintosh Serial Cable B-4
Table B-7 Connector Pin Assignments for an AUX Port Terminal Cable B-5
Table B-8 Connector Pin Assignments for an AUX Port Modem Cable B-6

About This Guide

This guide describes how to set up and operate the Silicon Graphics® Origin200™ server and Origin™ Vault expansion option. Both chassis have two formats: a standalone tower and an enclosure that can be mounted in the Origin Rack or other Silicon Graphics rack.

Audience

This guide is intended for Silicon Graphics-trained personnel.

Note: If you are installing or servicing an Origin Vault, we recommend you have available the owner's guide for the host system to which the Origin Vault is to be cabled and for any peripherals to be installed in the Origin Vault. For information on disks and filesystems under the IRIX™ operating system, consult the latest edition of *IRIX Admin: Disks and Filesystems*.

Structure of This Guide

This guide contains the following chapters and appendices:

- Chapter 1, "Origin200: Overview and Theory of Operations," provides an overview of the Origin200 chassis.
- Chapter 2, "Origin Vault: Overview and Theory of Operations," provides an overview of the Origin Vault chassis.
- Chapter 3, "Setting Up an Origin200 System," describes how to set up a single-module or dual-module tower Origin200 server.
- Chapter 4, "Setting Up an Origin Vault Expansion Option," shows how to install an Origin Vault in tower or rackmount configurations and attach it to an Origin200 or Origin2000 server.
- Chapter 5, "Installing an Origin200 System in a Rack," shows how to mount an Origin200 server in an equipment rack.
- Chapter 6, "Origin200 Server Operations," contains a variety of information about using an Origin200 server, including how to turn the system on and off, operate the front panel controls (reset, NMI), and issue commands to the module system controller (MSC).

- Chapter 7, "Installing and Removing Memory," explains how to install and remove the dual-inline memory modules (DIMMs) in an Origin200 server.
- Chapter 8, "Installing and Removing PCI Option Boards," describes how to install and remove PCI option boards in an Origin200 server.
- Chapter 9, "Installing and Configuring Peripherals," shows how to install, remove, and configure 5.25-inch and 3.5-inch drives in an Origin200 server. It also describes how to attach serial devices to the server.
- Chapter 10, "Troubleshooting," documents the LED error messages displayed by the Origin200 server, including messages from the status LED, Ethernet LEDs, and the power-supply test LED.
- Chapter 11, "Removing and Replacing Internal Parts," describes how to remove and replace all of the customer-replaceable units (CRUs) and field-replaceable units (FRUs) in both the Origin200 server and Origin Vault expansion chassis.
- Appendix A, "Connector Pinout Assignments," documents the pin assignments of the connectors on the back panels of both the Origin200 server and Origin Vault expansion chassis.
- Appendix B, "Cable Descriptions," describes the pin-to-pin wiring of the serial and AUX port cables that can be used with the Origin200 server.

Chapter 1

Origin200: Overview and Theory of Operations

The Origin200 server is a multiprocessor server that consists of one or two chassis or *modules*. Figure 1-1 shows a two-module system.

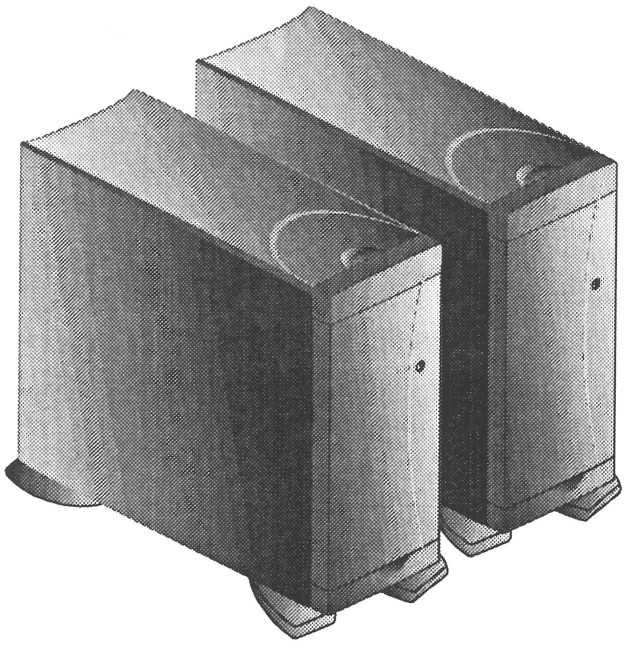

Figure 1-1 Two-module Origin200 System, Front View

Figure 1-2 shows a rear view of a two-module Origin200 system.

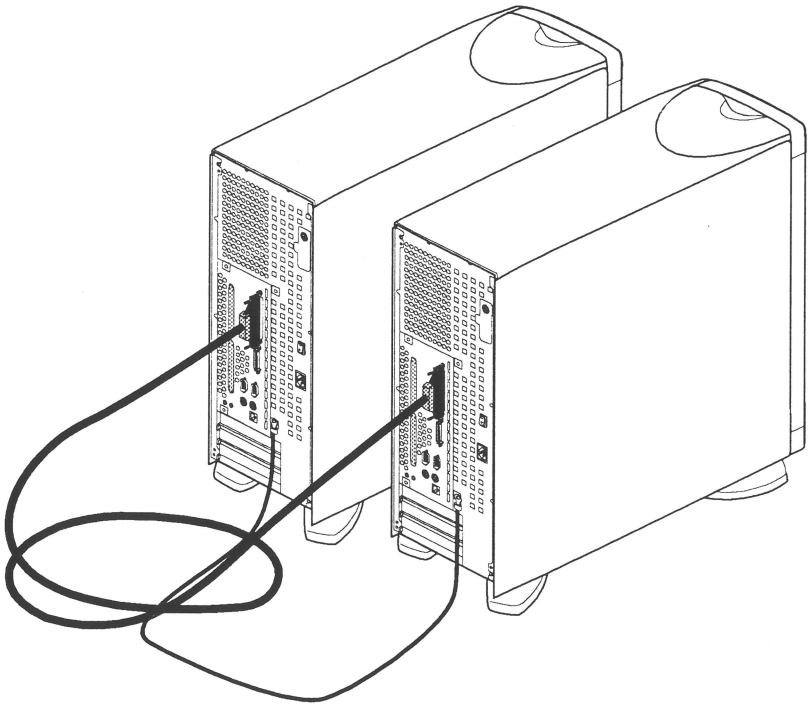

Figure 1-2 Two-module Origin200 System, Rear View

The Origin200 server can also be mounted in a 21-inch Silicon Graphics rack or a standard 19-inch rack. Figure 1-3 shows an example.

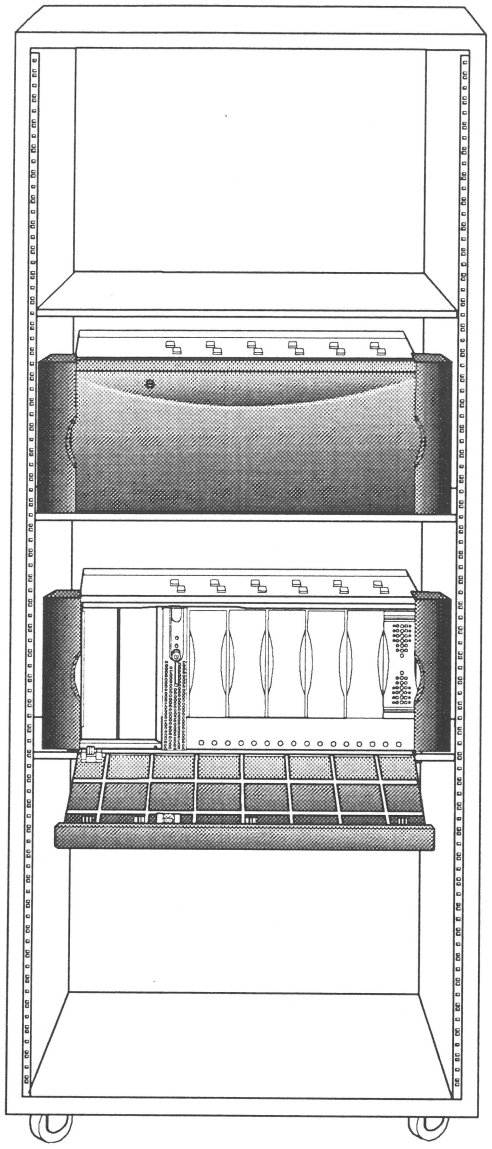

Figure 1-3 Two-module Origin200 Server in a Rack

1.1 Installation Options: Tower and Rackmounting

Each Origin200 system ships from Silicon Graphics in either a tower (free-standing) or rackmountable configuration. The tower configuration provides extra cosmetic "skins" (side panels and top-cap) and feet. The rackmountable configuration does not have these cosmetic features and feet, but does provide rackmounting slides and mounting ears, as well as a different front bezel.

If you wish to change your system from a tower configuration to a rack-mountable configuration, or vice versa, contact Silicon Graphics or your local support provider for information about obtaining a conversion kit.

1.2 Multimodule Grounding and Site Preparation

Like other members of the Origin family, the Origin200 server is extremely sensitive to differences in ground potential between modules. Multimodule systems are linked not only by a CrayLink Interconnect cable, but also by a grounding cable that ensures both modules are at the same potential.



Warning: **Any difference in ground potential greater than 500 millivolts (0.5 volts) between two chassis connected together with CrayLink Interconnect cables can cause severe equipment damage, and can create hazardous conditions.**

The same electrical grounding rules that apply to other Origin systems apply to Origin200:

- The power receptacles in the vicinity of the server should all be of an earthing type, and the grounding or earthing conductors serving these receptacles should be connected to earth at the service equipment.
- Each module must be grounded through its power connector.
- Both modules in a multimodule must share the same transformer, must be grounded through the same earthing rod, and must be on the same branch circuit.

For complete information about site preparation and electrical considerations, see *Site Preparation for Origin Family and Onyx2* (p/n 007-3452-001).

1.3 Feature Summary

Table 1-1 summarizes the general features of Origin200:

Table 1-1 General Features of Origin200

Feature	One-module System	Two-module System
R10000 processors and cache	1 or 2 processors each with separate on-chip instruction and data caches (32 KB, two-way set-associative) 1 MB secondary cache per processor, mounted on CPU module	2 to 4 processors
Memory	32 MB to 2 GB	64 MB to 4 GB
Module system controller (MSC)	1	(Second controller inactive in a two-module system.)

Table 1-1 (continued) General Features of Origin200

Feature	One-module System	Two-module System
SCSI channels (internal)	1, single-ended, Ultra SCSI 1, single-ended, Fast, narrow	2, single-ended, Altruists 2, single-ended, Fast, narrow
5.25-inch drives	1 full-height, or 2 half-height, or 2 1-inch	2 full-height, or 4 half-height or 2 1-inch
3.5-inch drives	6, 3.5-inch, Fast-20, wide	12, 3.5-inch, Fast-20, wide
Serial ports	2, RS-232 or RS-422 50 baud to 460 Kbaud	4, RS-232 or RS-422 50 baud to 460 Kbaud
Parallel port	1	2
Ethernet	1, 10-Base-T and 100-Base-TX	2, 10-Base-T and 100-Base-TX
AUX port	Serial interface to the module system controller	(Second AUX port inactive in a two-module system.)
PCI expansion slots	3, 32 or 64-bit, full-size	6, 32 or 64-bit, full-size
Power supply	1 (480 watt)	2 (480 watts each)

For additional information about power requirements, see "Power Supply" on page 14. For environmental specifications, including operating and nonoperating conditions, see "Physical and Environmental Specifications" on page 15.

1.4 Logic Carrier

The Origin200 logic carrier is a sheet-metal tray that holds:

- the main system board
- CPU daughter card
- PCI backplane

Together, the logic carrier sheet metal, the main system board, and the PCI backplane form a single, field-replaceable unit.

The logic carrier may be serviced only by Silicon Graphics-trained personnel.

Figure 1-4 shows the complete logic carrier assembly.

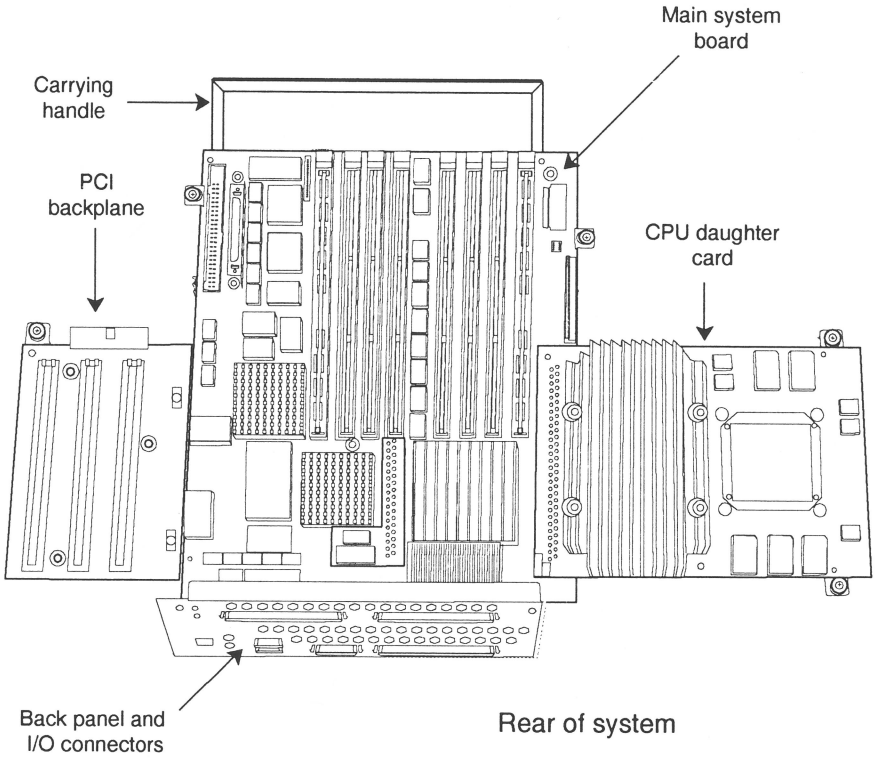

Figure 1-4 Logic Carrier Assembly

1.4.1 Main System Board

The main system board contains

- two SCSI controllers for internal drives
- Ethernet controller
- two serial port interfaces (UARTs)
- parallel port interface
- three PCI expansion slots
- four banks of two dual-inline memory module (DIMM) sockets (eight total DIMM sockets)
- CrayLink Interconnect connector

External connectors for the serial, Ethernet, and parallel interfaces, and the CrayLink Interconnect are all mounted directly to the main system board. See Figure 1-5.

1.4.2 CPU Daughter Card

Figure 1-5 shows the main system board, the CPU daughter card, and points out the locations of various components.

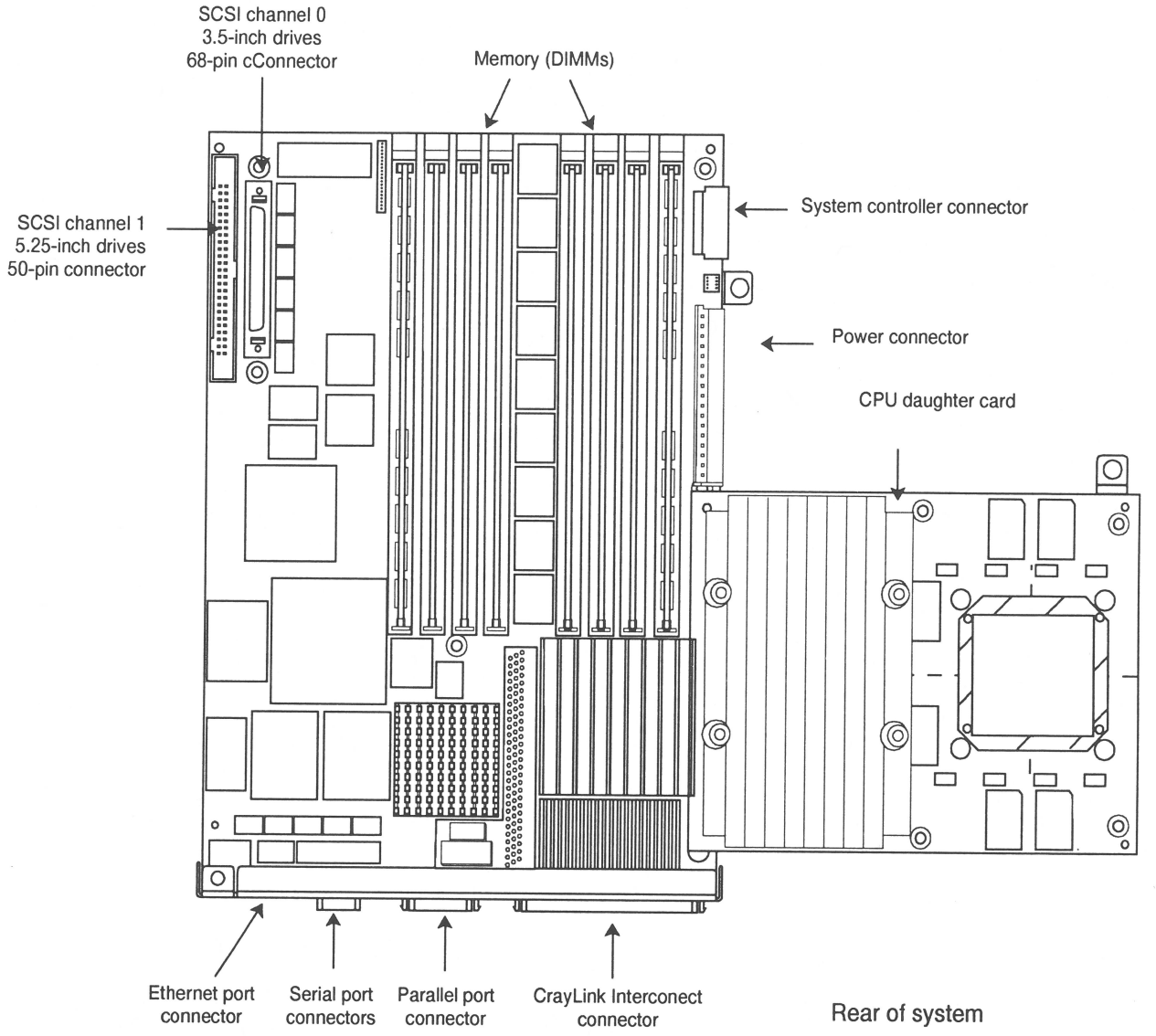

Figure 1-5 The Origin200 Main System Board and CPU Daughter Card

1.4.3 Module System Controller (MSC)

The module system controller (MSC), located behind the front power switch and status LED, performs the following functions:

- holds the system serial number
- provides power on, power off, reset, and other low-level functions
- displays system status information using a tricolor LED

Power-on, power-off, reset, and nonmaskable interrupts are performed by pressing buttons on the front panel. You can also perform these and other functions by issuing commands to the MSC via a terminal or modem connected to the AUX port at the rear of the system.

See "Front Panel Functions: Status LED, Power, Reset, NMI" in Chapter 6 for a description of the front panel. See "Using the AUX Port and Module System Controller Commands" in Chapter 6 for a description of the commands that the MSC can accept.

1.4.4 PCI Backplane and Expansion Slots

There are three expansion slots available for peripheral component interconnect (PCI) bus cards. The slots provide PCI IDs 5, 6, and 7. See Figure 1-6.

Boards can be full-size, 32-bit and 64-bit. In addition to providing 5V, the PCI backplane also accommodates 3.3V PCI cards with up to a total of 30 watts of 3.3V power.

Figure 1-6 shows the location and slot numbers of the PCI backplane.

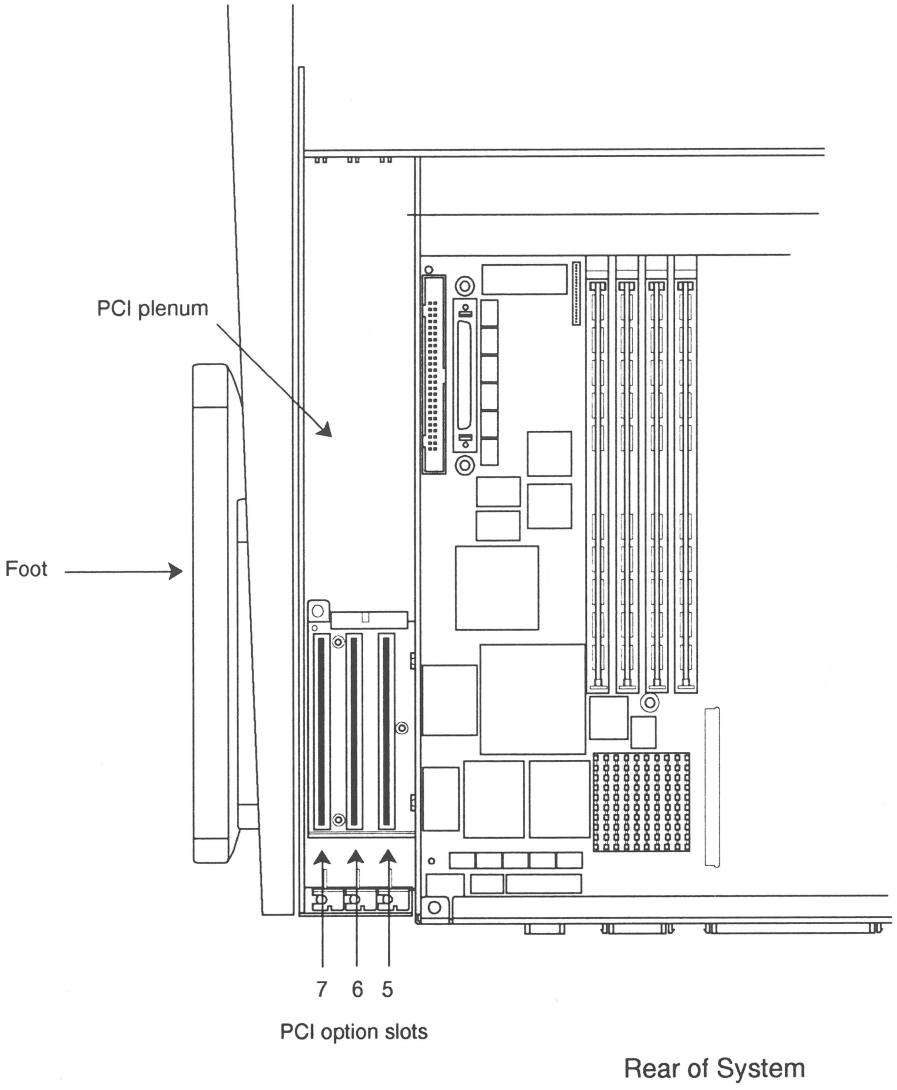

Figure 1-6 PCI Backplane and Slot IDs

1.5 Memory

Each Origin200 module can have between 32 MB and 2 GB of memory, depending upon the type of dual in-line memory module (DIMM) that you install. DIMMs are installed in sockets that are grouped into two banks of four sockets each. Figure 1-7 shows the layout of the DIMM sockets on the main system board.

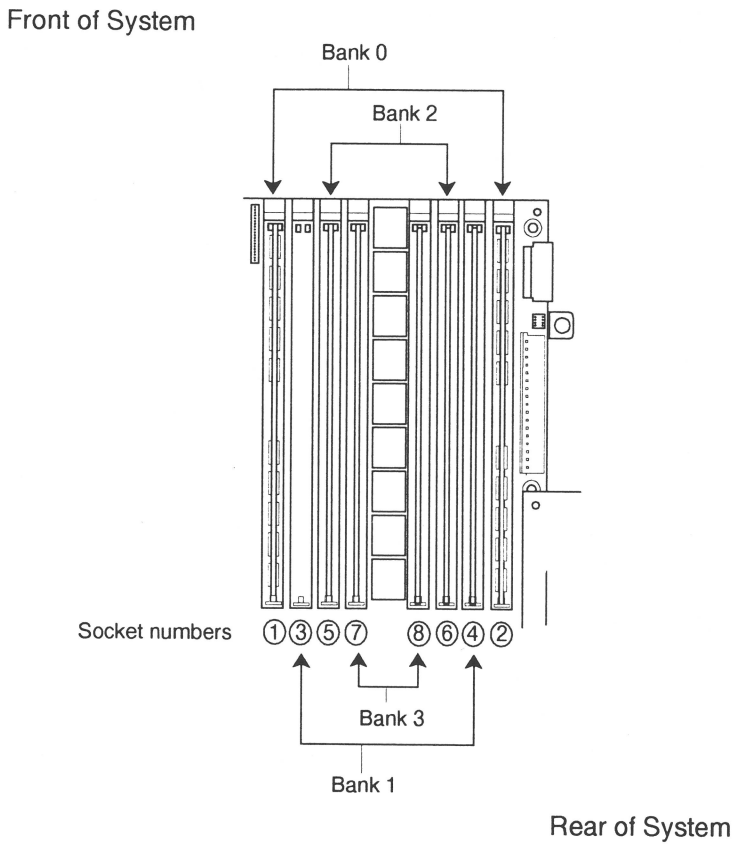

Figure 1-7 Layout of DIMM Sockets on the Origin200 Main System Board

Note the following about installing DIMMs in an Origin200 module:

- DIMMs are installed in pairs, with one pair per bank.
- A module must have at least one DIMM pair installed.
- DIMMs in each bank must be of the same type, but each bank may have a different type of DIMM.
- Interleaving between banks and DIMMs is designed into the memory architecture; you cannot alter the interleaving factors. Maximum interleaving is achieved with a single bank.

1.6 Internal Drive Options and SCSI Channels

The Origin200 server provides bays for two sizes of internal drive options: 5.25-inch drives and 3.5-inch drives.

1.6.1 5.25-Inch Drives and Drive Bay

The 5.25-inch drive bay can be used for two combinations of drive form-factor:

- one full-height drive
- two half-height drives or two 1-inch drives

The 5.25-inch drives are controlled by SCSI channel 1, and drive IDs are set by jumpers on the drives. Drives are mounted in a removable peripheral carrier, shown in Figure 1-8.

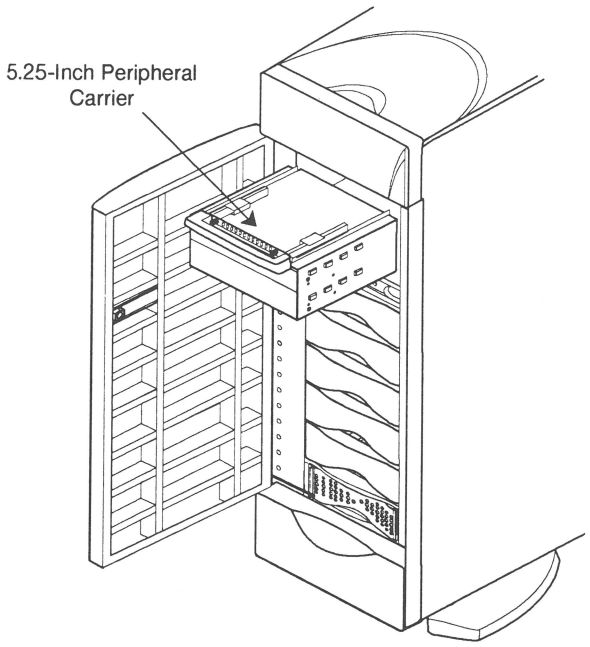

Figure 1-8 Origin200 5.25-inch Peripheral Carrier and Drive Bay

1.6.2 3.5-Inch Drives and Drive Bay

The 3.5-inch drive bay has room for six drives, mounted individually on sleds. The 3.5-inch drives are attached to SCSI channel 0.

Each sled attaches to the 3.5-inch SCSI midplane with SCA connectors. Drive IDs are set by the position of the drive in the drive bay, with ID 1 at the bottom of the drive bay and ID 6 at the top of the drive bay. Figure 1-9 shows a 3.5-inch drive, sled, and drive bay.

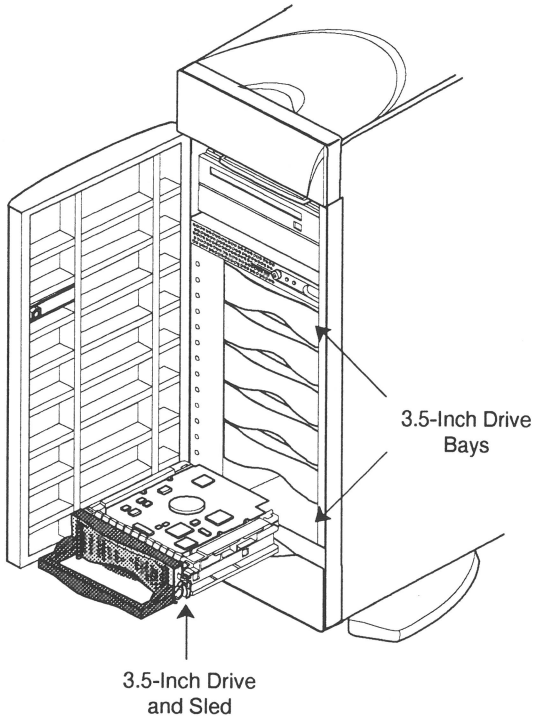

Figure 1-9 Origin200 3.5-inch Drive, Sled, and Bay

1.6.3 SCSI Channels and Channel Numbering

There are two SCSI channels in each Origin200 module. Table 1-2 lists the channels in each module and their characteristics.

Table 1-2 Origin200 SCSI Channel Numbers and Characteristics

First module	Second module	Drives	Description
0	2	3.5-inch	Fast-20 SCSI-II, 16-bit (wide), running at 20 MHz, and capable of transferring 40 MB per second.
1	3	5.25-inch	Fast SCSI-II, 8-bit (narrow), running at 10 MHz, and capable of transferring 10 MB per second.

Note: SCSI channels in a one module system are fixed at 0 and 1. The master module in a two-module server also uses channels 0 and 1. However, the slave module channel numbers may vary depending upon the order in which they are detected the first time the system is powered on. See "Determining What Devices are Installed On the Server" in Chapter 6 for an explanation of device detection and numbering.

1.7 Serial Ports

Each Origin200 module provides two serial ports capable of transferring data at speeds ranging from 50 baud to 460 Kbaud. The default serial port configuration is RS-232, but the serial ports can be opened programmatically in RS-422 mode. The serial ports can also be used to send and receive *MIDI* information.

The serial port connectors are DB-9, male, and are designed to be IBM-compatible. Because of this, they do not use the same pinouts as prior Silicon Graphics DB-9 serial ports.

Table 1-3 lists the serial ports and their correspondence to IRIX device files.

Table 1-3 Serial Port Numbers and Correspondence to IRIX Device Files

Serial Port Number	IRIX Device File (RS-232 Mode)	IRIX Device File (RS-422 Mode)	IRIX Device File (MIDI Mode)
First module:			
1 (system console)	*/dev/tty[c,d,f,m]1*	*/dev/tty4[d,f,m]1*	*/dev/ttymidi1*
2	*/dev/tty[c,d,f,m]2*	*/dev/tty4[d,f,m]2*	*/dev/ttymidi2*
Second module:			
3	*/dev/tty[c,d,f,m]3*	*/dev/tty4[d,f,m]3*	*/dev/ttymidi3*
4	*/dev/tty[c,d,f,m]4*	*/dev/tty4[d,f,m]4*	*/dev/ttymidi4*

Serial ports in a single-module system, and in the master module are fixed at 1 and 2, with port 1 being the system console. See "Determining What Devices are Installed On the Server" in Chapter 6 for an explanation of device detection and numbering.

1.8 Parallel Port

The parallel port is a 36-pin, high-density connector which meets the IEEE-1284 specification.

1.9 Ethernet Port

Each Origin200 module contains a single RJ-45 connector for 10-Base-T or 100-Base-TX Ethernet. The connector has two integral LEDs that provide basic status. Network speed is automatically negotiated.

Note: Category 5 wiring is required for proper 100-Base-TX operation.

1.10 Power Supply

Features of the Origin200 power supply are as follows:

- Autoranging input from 100 VAC (15A) to 220 VAC (10 A), and from
- 480 watt output, +5VDC, +12 VDC, -12 VDC
- Inrush current: 40 A (cold) and 140 A (hot)
- 2 KVA
- Unity power-factor corrected

1.11 Air Flow and Fans

Air flow through Origin200 is from the front of the system to the rear, and is drawn by three DC fans located just behind the internal drive bays. Figure 1-10 shows the direction of air flow through Origin200.

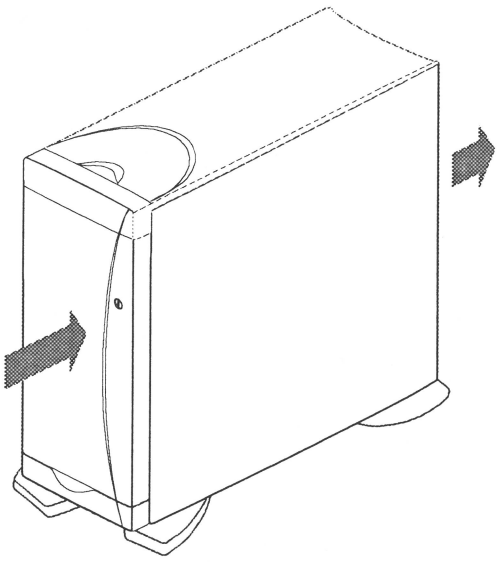

Figure 1-10 Air Flow Through Origin200

1.12 Physical and Environmental Specifications

Table 1-4 lists the various physical and environmental specifications of Origin200.

Table 1-4 Origin200 Physical and Environmental Specifications

Specification	Value
Dimensions	
Tower	23" H, 26.5" D, 9" W (58.4 cm H, 67.3 cm D, 22.8 cm W)
Rack	6.8" H, 25" D, 17.4" W (17.3 cm H, 63.5 cm D, 44.2 cm W)
Weight	
Minimum	40 lbs (18 kg)
Maximum	75 lbs (34 kg)
Environmental (Operating)	
Temperature	+5 degrees to +35 degrees C
Humidity	10% to 80% noncondensing
Altitude	10,000 MSL
Noise	55 dBa
Heat dissipation	2300 BTU per hour, maximum

Chapter 2

Origin Vault: Overview and Theory of Operations

The Origin Vault expansion option is a drive enclosure that holds up to six 3.5-inch drives and either one full-height 5.25-inch drive or two half-height 5.25-inch drives. It provides expansion capacity for Silicon Graphics Origin2000, Origin200, and Onyx2 deskside and rackmount servers and workstations.

The Origin Vault expansion option shares the same sheet metal and basic skin set as the Origin200 server.

This chapter contains

- Section 2.1, "Origin Vault Versions"
- Section 2.2, "Internal Drive Options and SCSI Channels"
- Section 2.3, "Proper Operating Conditions"

2.1 Origin Vault Versions

The Origin Vault expansion option is available as a standalone tower or as a rackmountable drive enclosure. Figure 2-1 shows the standalone tower version.

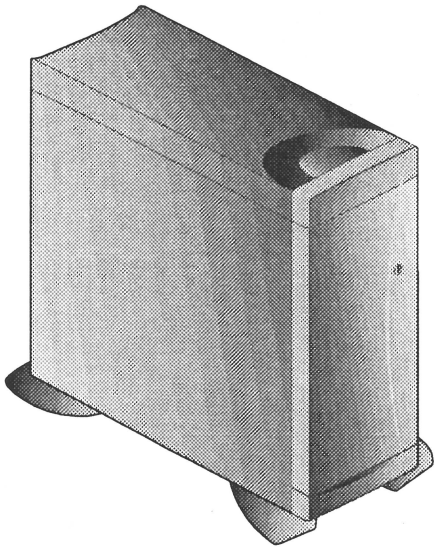

Figure 2-1 Origin Vault Standalone Tower, Front View

The Origin Vault drive enclosure version can be mounted in the Origin Rack or other 21-inch Silicon Graphics rack, or in an industry standard 19-inch rack. The rackmountable version has a front bezel (different from that for the tower), as well as mounting hardware. Figure 2-2 shows a example front view of a rackmounted Origin Vault drive enclosure.

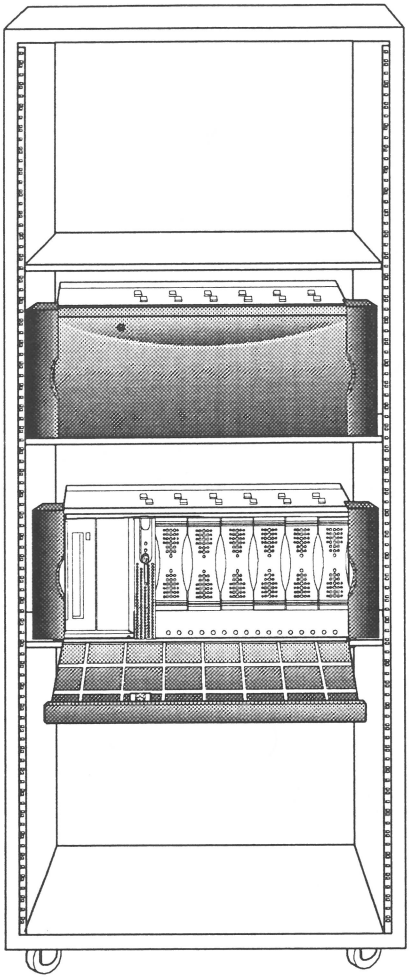

Figure 2-2 Example Rackmounted Origin Vault Enclosure

Both the tower and the rackmountable enclosure are available with a single-ended or a differential 3.5-inch drive controller. For all versions, the 5.25 drive controller is single-ended only.

2.2 Internal Drive Options and SCSI Channels

Figure 2-3 shows drive bay locations in each version of the expansion option.

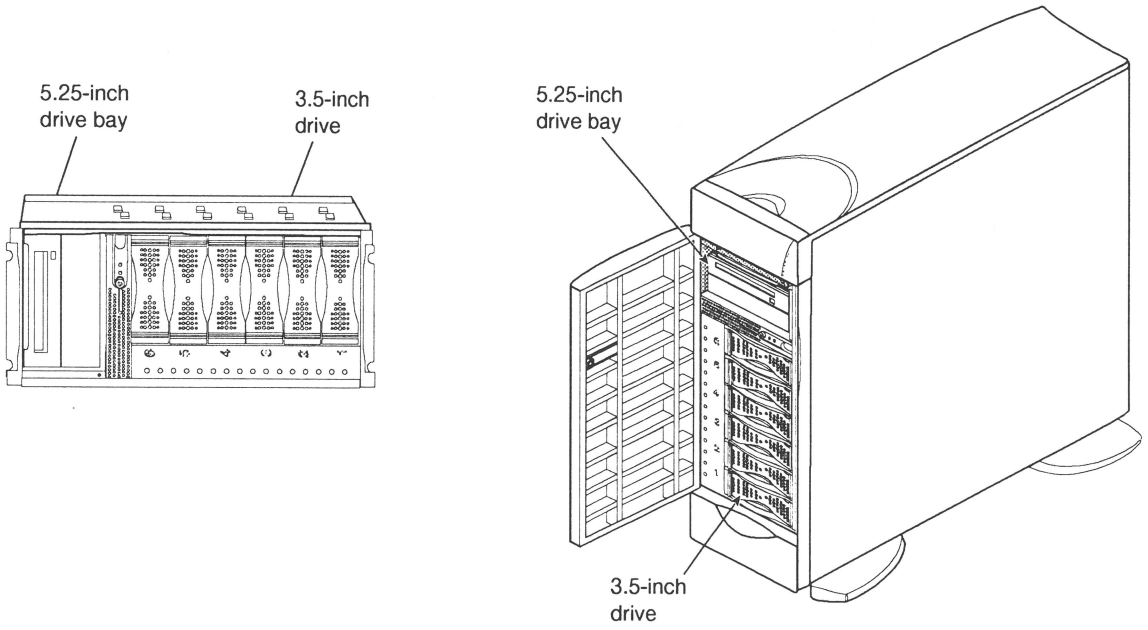

Figure 2-3 Drive Bay Locations

The 3.5-inch drives can be 20 or 40 (Fast-20 SCSI) megatransfers/second; the 5.25-inch drives operate at 5 or 10 megatransfers/second.

Note: The SCSI connectors for both the 3.5-inch and 5.25-inch drives terminate within the Origin Rack; daisy chaining is not possible.

The two types of drives have separate connectors on the rear of the chassis. Figure 2-4 shows the SCSI connectors in the standalone tower.

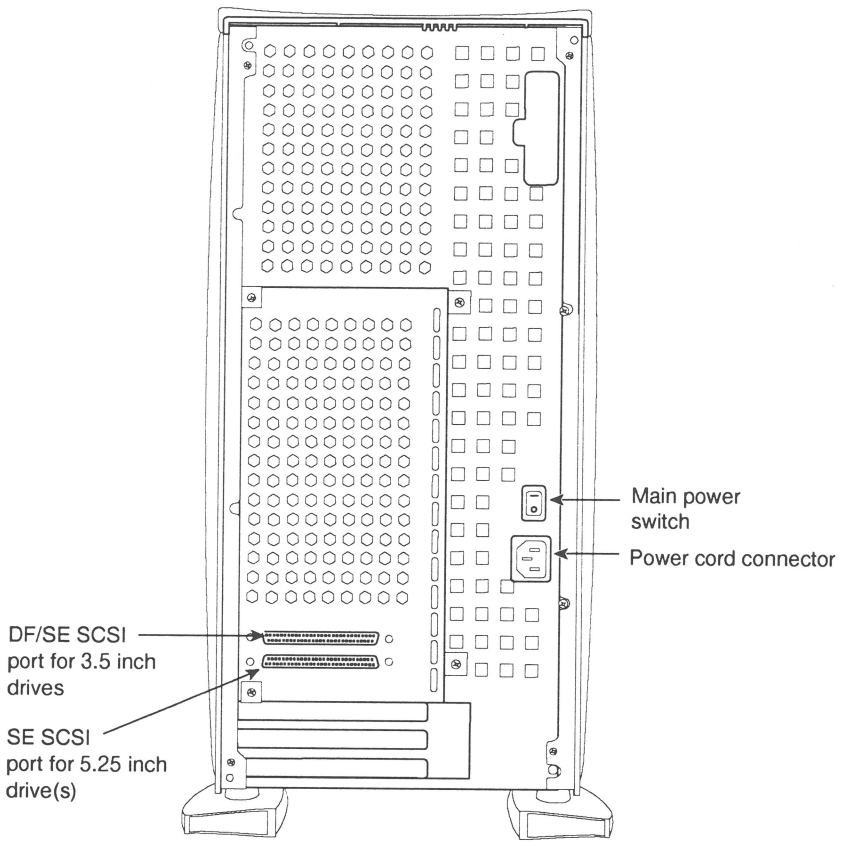

Figure 2-4 Origin Vault Standalone Tower Rear View

Figure 2-5 shows the SCSI connectors in the rackmountable enclosure.

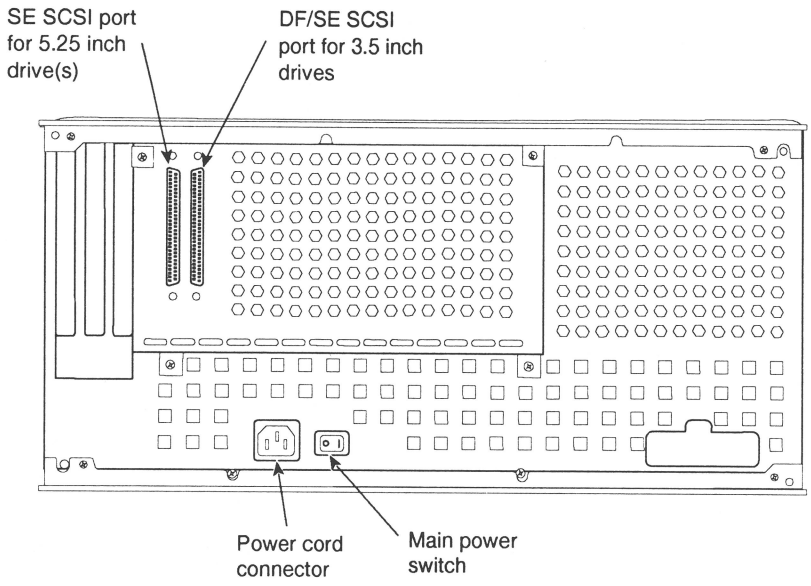

Figure 2-5 Origin Vault Rackmountable Enclosure Rear View

This section contains the following subsections:

- Section 2.2.1, "3.5-Inch Drives"
- Section 2.2.2, "5.25-Inch Drives"
- Section 2.2.3, "Drive LEDs"

2.2.1 3.5-Inch Drives

Each disk drive is mounted on a sled that interfaces to the SCSI backplane with a Fast-20 80-pin single-connector assembly (SCA) connector. Figure 2-6 shows a drive, its sled, and drive bays.

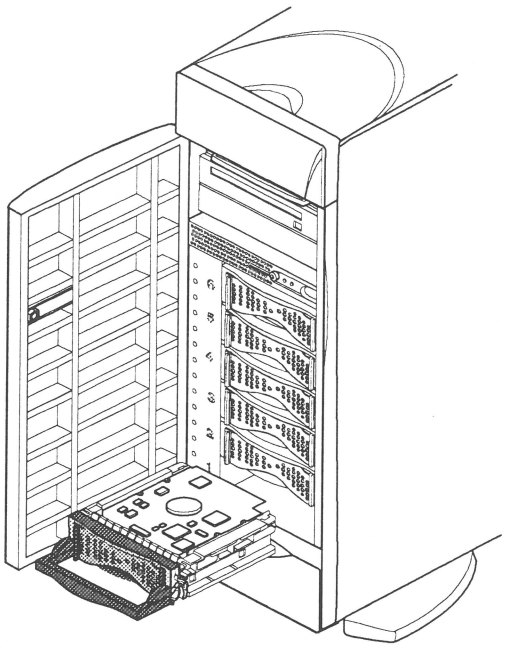

Figure 2-6 3.5-Inch Drive, Sled, and Bay

The connector on the backplane for each drive bay automatically sets the SCSI ID for the drive inserted into that bay. By default, drives are numbered 1 through 6, starting with the bay farthest from the power button. Drive numbering from 9 through 14 is available by jumpering two pins on the 3.5-inch drive backplane; this procedure is explained in Chapter 4, "Setting Up an Origin Vault Expansion Option."

The Origin Vault expansion option is shipped either with six 3.5-inch disk modules or with no disk modules. Individual disk modules can be ordered; Table 2-1 summarizes the individual disk modules available.

Table 2-1 Individual Disk Modules

Disk Module	Marketing Code
4.5-GB SE Fast-20 SCSI	P-S-4
9.1-GB SE Fast-20 SCSI	P-S-9

The Origin Vault SCSI disk drives and their sleds are the same as those for the Origin2000 or Origin200 system. The Origin Vault disk drives are not hot-pluggable.

The 3.5-inch drive portion of the option is shipped either as single-ended or differential for both the tower and the rackmountable enclosure, depending on the option that was ordered.

2.2.2 5.25-Inch Drives

The 5.25-inch two-drive bay's SCSI line provides a Fast-10 rate of transfer. This bay is used for one full-height drive, such as a a DLT™ tape drive, or two half-height removable media drives, such as a CD-ROM drive and a DAT tape drive. The 5.25-inch drives are single-ended (narrow) only.

Note that although the connector for the 5.25-inch drive on the rear of the Origin Vault has 68 pins, the cable inside to the 5.25-inch drive backplane has 50 lines.

2.2.3 Drive LEDs

Each drive has a corresponding LED, mounted on the SCSI backplane, and are made visible from the front of the tower or expansion chassis by the use of light pipes. The drive LEDs light to indicate disk activity. Drive fault is indicated by messages on the system console.

An LED next to the power button lights to indicate that power is being supplied to the Origin Vault.

2.3 Proper Operating Conditions

Origin Vault expansion option is designed for operation in a typical office environment. Maintain the following operating conditions for best results:

- The standalone tower or the rack holding the drive enclosure should always be kept in a clean, dust-free environment.
- Protect the unit from harsh environments that produce excessive vibration, heat, or other extreme conditions.
- The available power should be rated and conditioned for computer operation.
- Use an uninterruptable power supply when possible.
- If the standalone tower is connected to an Origin200 system, both systems must be plugged into the same grounded power circuit; otherwise, damage can result to components on the Origin200 system main system board.
- The standalone tower should have air clearances of four inches (2.5 cm) on all sides. For more information, see *Site Preparation for Origin Family and Onyx2* (007-3452-001).

As with Origin200, air flow through either version of the Origin Vault expansion option is from the front of the system to the rear, and is drawn by three DC fans located just behind the drive bays.

2.4 Technical Specifications

This section describes various physical and environmental specifications that apply to the Origin Vault expansion option.Table 2-2 describes the size and weight of the Origin Vault chassis.

Table 2-2 Origin Vault Specifications

Category	Tower	Rackmountable Enclosure
Height	22.0 inches (55.8 cm)	6.9 inches (17.5 cm)
Width	7.5 inches (19 cm) without feet	19 inches (48 cm)
Length	24 inches (60.9 cm)	22.5 inches (57 cm)
Weight		
Minimum	35 lbs (15.9 kg)	30 lbs (13.6 kg)
Maximum	60 lbs (27 kg)	55 lbs (25 kg)
Drive module	1 to 7 lbs (0.45 to 3.2 kg)	1 to 7 lbs (0.45 to 3.2 kg)

Table 2-3 lists (conservative) power specifications for the Origin Vault tower and rackmountable enclosure.

Table 2-3 Origin Vault Power Specifications

Category	Value
Power supply	480 watts maximum
Frequency	50/60 Hz
Voltage	110-120/220-240 V at 50/60 Hz
Inrush current	40 A (cold) to 140 A maximum (hot)
Cooling	1,200 Btu/hr (0.1-ton AC load) maximum required
Power Factor Correction	0.98 (unity)

The Origin Vault power supply is identical to the one found in the Origin200 server. For additional information on the power supply, see "Power Supply" in Chapter 1.

Table 2-4 lists operating environment conditions for the Origin Vault tower and rackmountable enclosure. For more detail on electrical and thermal issues, see Site Preparation for Origin Family and Onyx2 (007-3452-001).

Table 2-4 Origin Vault Operating Environment Specification Operating Environment Specifications

Category	Operating	Nonoperating
Air temperature	<5000 ft: 41° to 95° F (5° to 35° C) >5000 ft: 41° to 86° F (5° to 30° C)	-4° to 140° F (0 to 60° C)
Thermal gradient	18° F (10° C)/ hour maximum	N/A
Altitude	10,000 ft (3,048 m) MSL, maximum	40,000 ft (12,192 m) MSL, maximum
Humidity	10% - 90% (noncondensing)	10% - 95% (noncondensing)
Humidity gradient	10% relative humidity/hour maximum	N/A
Acoustics	55 dBa	N/A
Vibration	Maximum sustained: 5-10 Hz @ .01" total excursion, 10-500 Hz @ 0.1g Maximum peak: 5-10 Hz @ .01" total excursion, 10-500 Hz @ 0.1g Sensitive frequency: 8-33 Hz (varies with configuration)	N/A

Table 2-5 summarizes types of drives that can be installed in the Origin Vault expansion cabinet (and Origin200 server).

Table 2-5 Characteristics and Types of Drives That Can Be Installed in Origin Vault and Origin200

Feature	Configuration
3.5-inch disk drives	Up to six, maximum height 1.6 inches (4 cm) Terminated on backplane; no daisy chaining Single-ended (differential with converter board) FAST-20 SCSI (40 megatransfers/sec) or SCSI-2; 16-bit wide

Table 2-5 Characteristics and Types of Drives That Can Be Installed in Origin Vault and Origin200

Feature	Configuration
5.25-inch drives	One full-height or two half-height, maximum height 1.6 inches (4 cm) Terminated on backplane; no daisy chaining Single-ended Fast-10 SCSI (20 megatransfers/sec) or SCSI-2
5.25-inch SCSI drive bay	Up to two drives, no daisy-chain option
SCSI channels (internal)	One single-ended (differential with converter board), 68-wire One single-ended, 50-wire
SCSI channels (external)	Two 68-pin (FAST-20)

Table 2-6 lists specifications for the 3.5-inch disk drives used at the time of this writing.

Table 2-6 Origin Vault and Origin200 3.5-Inch Disk Drive Specifications

Feature	4.5 MB	9.1 MB
Connector	SCA 80-pin	SCA 80-pin
Formatted capacity (MB)	4,550	9,100
Heads/disks	10/5	18/9
Track density (tpi)	6,160	6,160
Average seek time (ms)	<9.5	<10
Burst transfer rate (MB/sec)	40	40
Buffer size (KB)	256	256
Rotational speed (rpm)	7,200	7,200

The external 68-pin SCSI connector on the rear of the Origin Vault chassis for the 3.5-inch drives supports both Ultra SCSI and SCSI-2 devices. It sends single-ended SCSI signals or differential signals, depending on the Origin Vault version. The external 68-pin SCSI connector for the 5.25-inch drives supports SCSI-2 devices only and sends single-ended signals only.

Chapter 3

Setting Up an Origin200 System

This chapter describes how to set up a one or two module Origin200 system. It includes information about:

- choosing a proper location for the server (tower configuration)
- putting together the pieces of the system
- attaching an Ethernet networking cable
- attaching a serial (ASCII) terminal or other system console
- attaching a second Origin200 module
- attaching an optional Origin Vault expansion chassis
- turning on the system
- logging in for the first time
- turning off the system
- removing and replacing the system cover and chassis access panel

Specific information about mounting an Origin200 module in an equipment rack is provided in Chapter 5, "Installing an Origin200 System in a Rack."



Warning: **When installing a two-module system, or an attaching an Origin Vault expansion box, all chassis must be connected to the same, grounded power circuit. If the chassis are not all connected to the same power supply, resulting differences in ground potential (current) can damage components on the Origin200 main system board.**

3.1 Choosing a Location For the Server

When choosing a location for your Origin200 server, follow these guidelines:

- Proper electrical grounding is critical All parts of the server (each module and any expansion cabinets) *must* be on the same, grounded electrical circuit. Otherwise, the Origin200 system board will be damaged.
- For a tower (free-standing) system, make sure the surface on which you place the server is capable of supporting at least 40 pounds (18 kg) per module. Be aware that a fully-configured Origin200 module can weight up to 75 pounds (34 kg) per module.

- Be sure to provide adequate space for proper airflow and cooling. Refer to Table 1-4 in Chapter 1, "Origin200: Overview and Theory of Operations" for a complete list of environmental specifications. Figure 3-1 below shows the minimum distances required around the chassis.

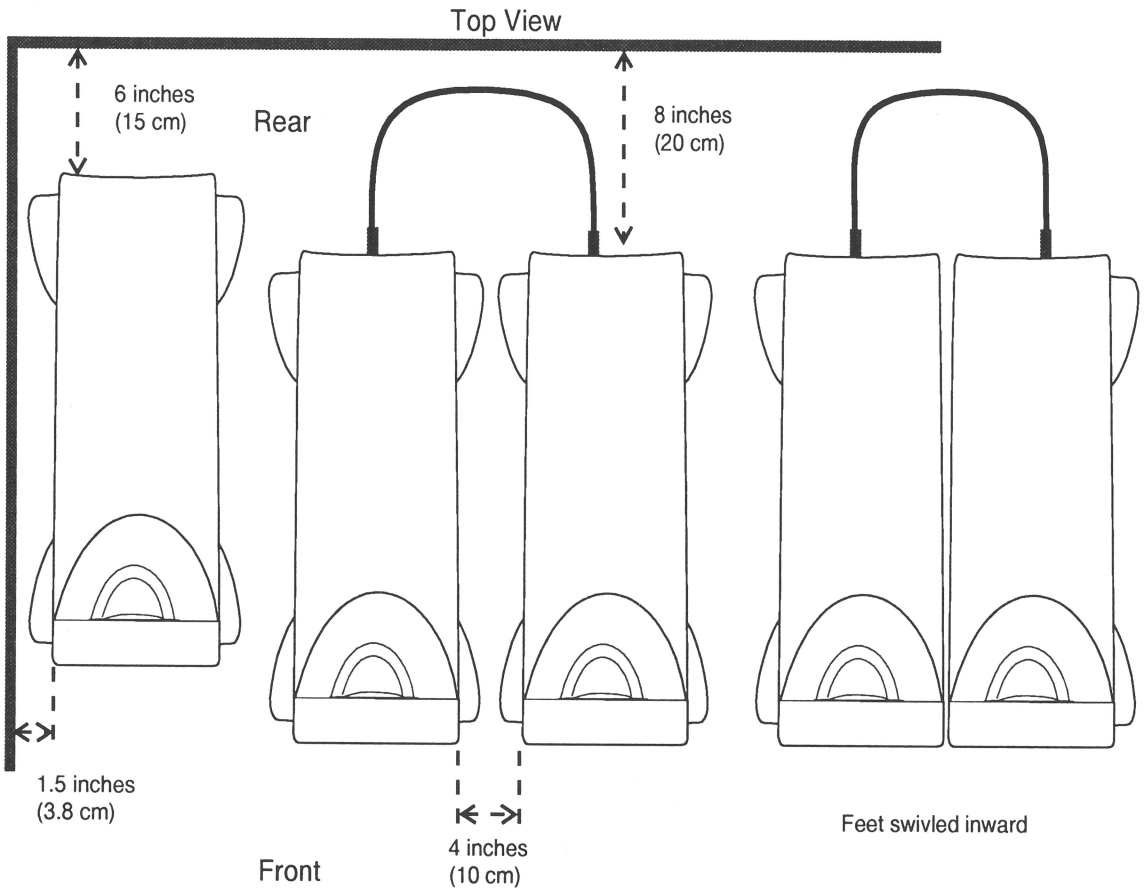

Figure 3-1 Minimum Clearances for Origin200, Tower Configuration

3.2 Putting the Pieces Together

Figure 3-2 shows the various items that are packed with a basic Origin200 server in a tower configuration. Your shipment may have included additional options, such as drives, memory, and PCI option boards.

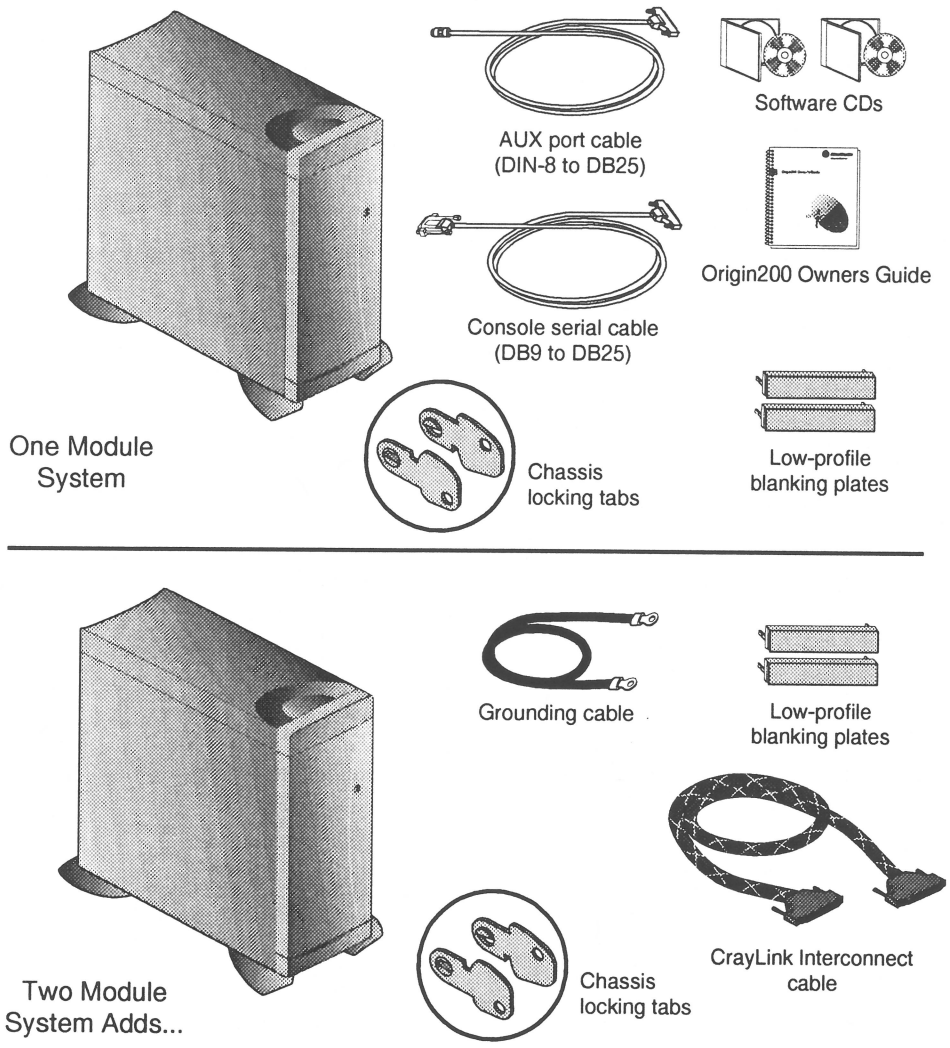

Figure 3-2 Basic Items Included With the Origin200, Tower Configuration

Figure 3-3 shows the various items shipped with an Origin200 server in a rack-mountable configuration:

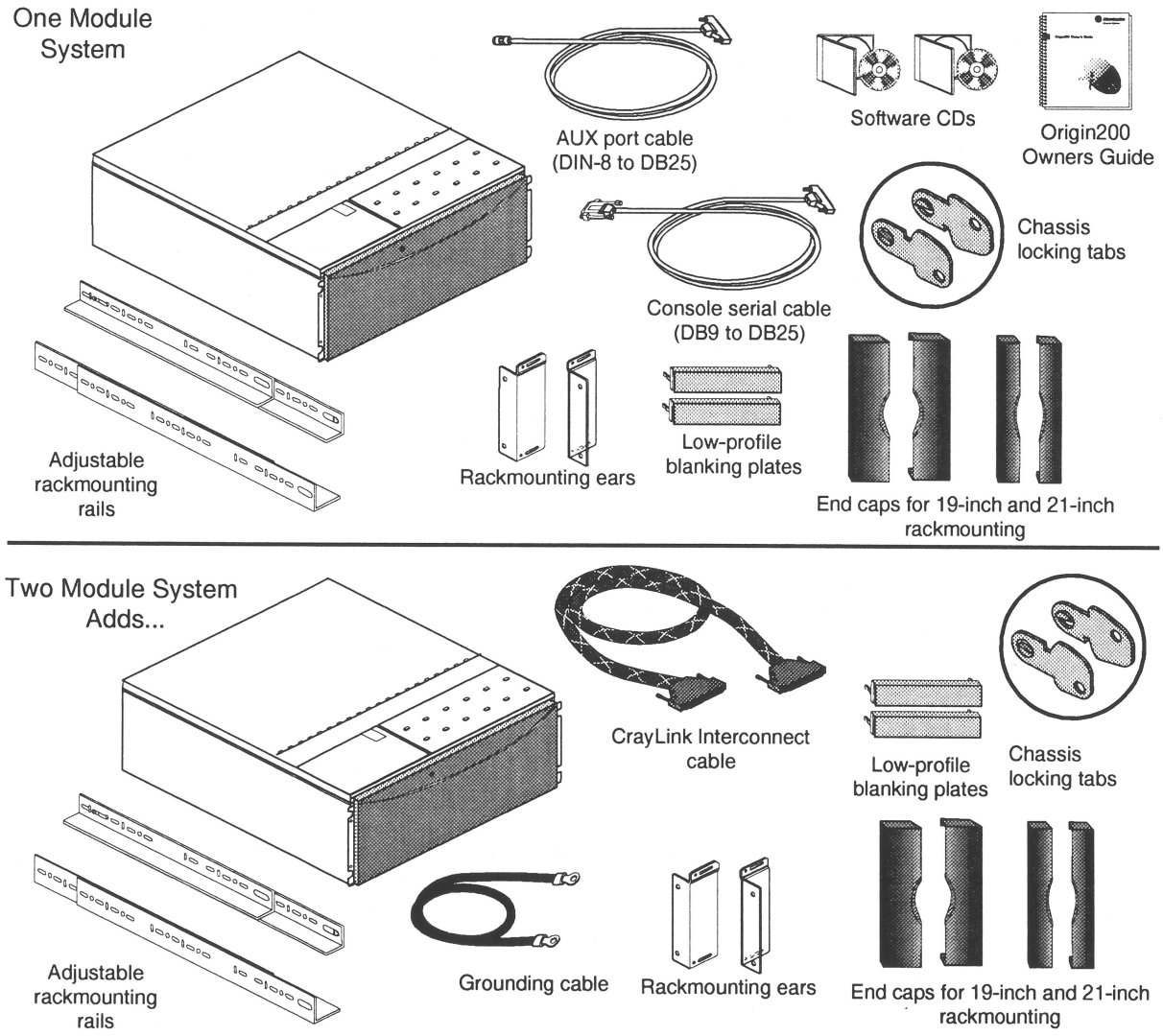

Figure 3-3 Basic Items Included With the Origin200, Rack-Mountable Configuration

3.2.1 Overview of the System Connectors and Ports

When you assemble a Origin200 module you attach various cables (system console, power, Ethernet network, and CrayLink Interconnect) to the rear of the system. Figure 3-4 provides an overview of the various connectors that are available.

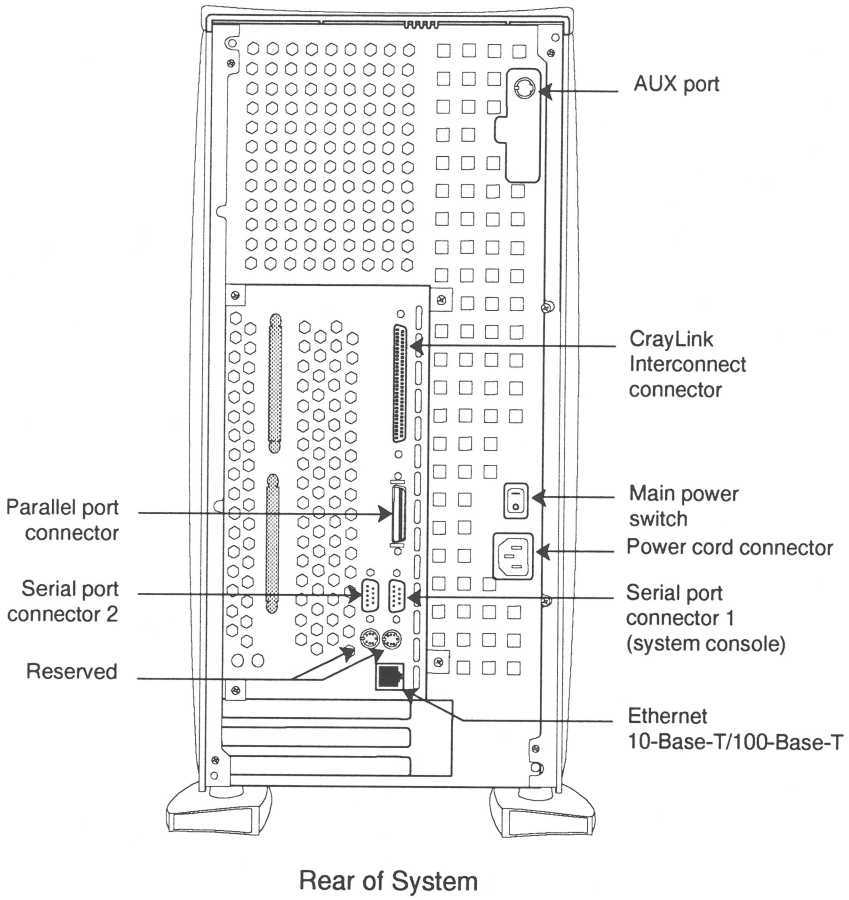

Figure 3-4 Origin Connectors

For a complete description of these connectors, see Chapter 1, "Origin200: Overview and Theory of Operations" and Appendix A, "Connector Pinout Assignments."

3.2.2 Safety Considerations

When working on a Origin200 server, follow these safety precautions:

- Use two people to move a server module.
- Place the chassis on a surface capable of supporting a minimum of 40 lbs (about 18 kg) per module. A fully-configured Origin200 module can weigh up to 75 lbs (34 kg).
- Before opening the chassis, turn off the master power switch at the rear of the system. This disconnects power to the power supply. The software-power switch at the front of the chassis shuts off the server, but does not disconnect the power supply.
- When opening the chassis, for example to install and remove additional peripherals and memory, always observe proper electrostatic discharge (ESD) procedures. Make sure you are properly grounded with a wrist or heel strap before handling sensitive

boards and drives. All Silicon Graphics peripheral, memory, and upgrade options are shipped with wrist straps.

3.2.3 Assembling the Server

Follow these steps to assemble the Origin200 module.

1. Unpack each module that was shipped as part of your complete Origin200 system.
2. If additional memory or PCI option boards are included in the shipment, install those now.
   - For instructions on removing the system cover, see "Removing and Replacing the System Cover and Chassis Access Panel" in Chapter 6.
   - For instructions on installing memory, see Chapter 7, "Installing and Removing Memory."
   - For instructions on installing PCI option boards, see Chapter 8, "Installing and Removing PCI Option Boards."
   - *Do not* install disk drives yet. These make the modules heavier and more difficult to move as you continue to set up the system.
3. If you are installing the Origin200 modules in an equipment rack, turn now to Chapter 5, "Installing an Origin200 System in a Rack."
   - Follow the instructions for installing the Origin200 module in an equipment rack.
   - When you are finished installing the module in the equipment rack, return to the next section, "Attaching an Ethernet Networking Cable."
4. If you are installing a tower (free-standing) Origin200 server, place it in the location you determined earlier (see "Choosing a Location For the Server.")

3.2.4 Installing 3.5-Inch Drives

After you have placed the server in the desired location (either in a free-standing, tower configuration, or mounted in an equipment rack), install any option drives.

All 3.5 inch drives shipped from Silicon Graphics for use in Origin200 systems are attached to mounting sleds. The SCSI ID of the drive is set automatically when it is installed in the system. The bottom 3.5-inch drive slot (right-most slot in a rack system) is drive ID 1, and the top 3.5-inch drive slot (left-most slot in a rack system) is drive ID 6. See Figure 3-5.

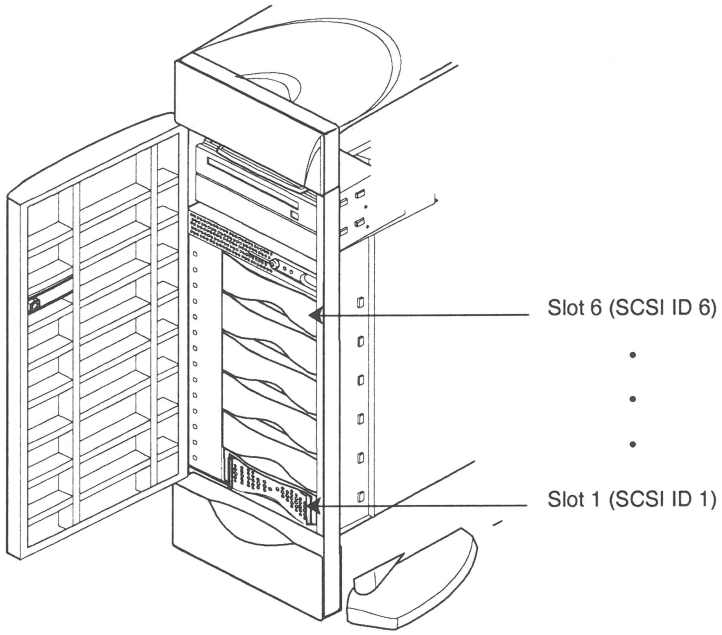

Figure 3-5 SCSI Drive ID Numbering for 3.5-Inch Drives

Install any 3.5-inch drives as shown in Figure 3-6.

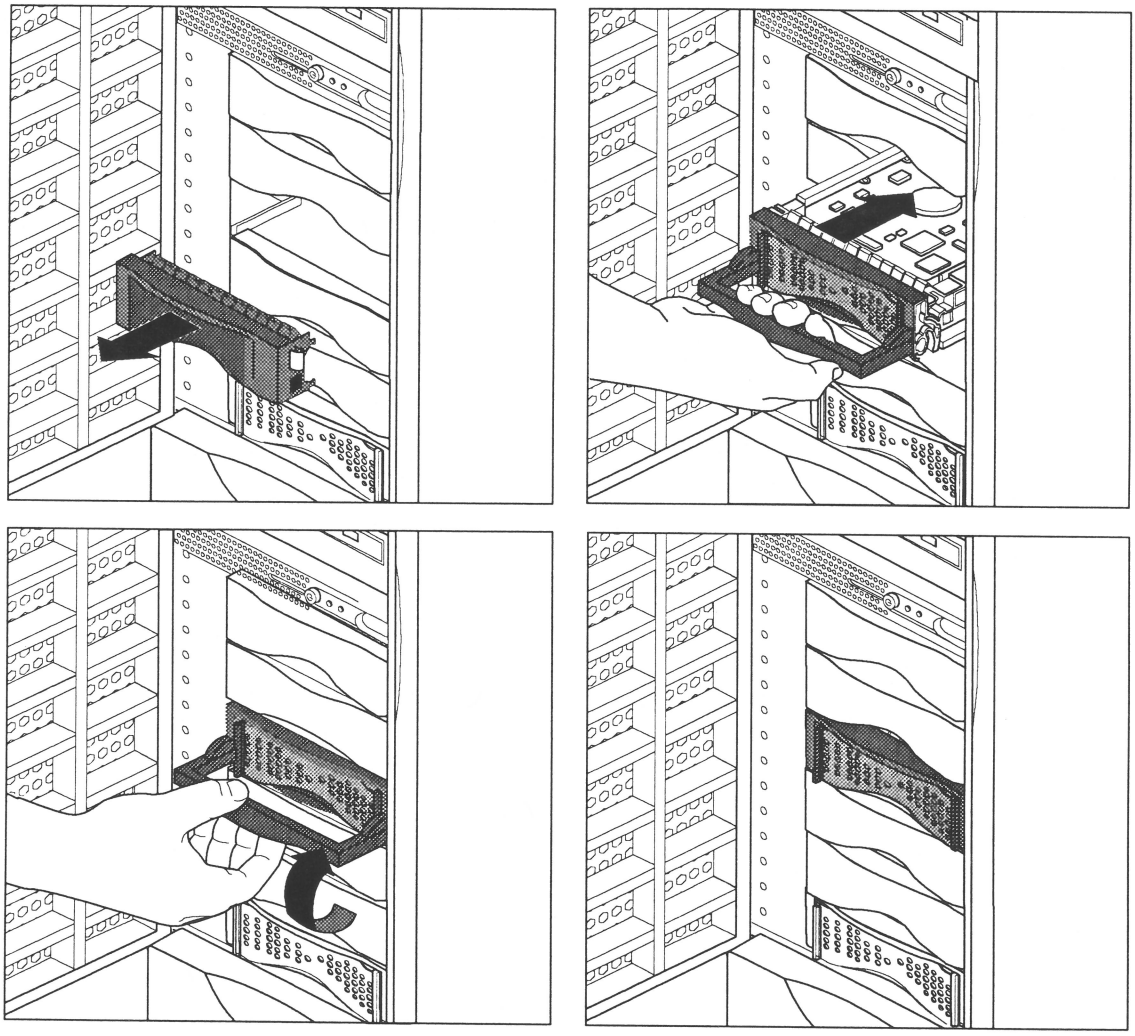

Figure 3-6 Installing 3.5-Inch Drives in Origin200

Advise the customer to save any blanking plates you remove in case the drives are removed drives later. For more information about using 3.5-inch drives, see Chapter 9, "Installing and Configuring Peripherals."

3.2.5 Installing 5.25-Inch Drives

Note: If you are installing a non-Silicon Graphics 5.25-inch drive, see "Installing, Removing, and Configuring 5.25-Inch Peripherals" in Chapter 9.

5.25-inch drives are installed in a removable carrier. Follow these step to remove the carrier:

1. Pull out the carrier handle.
2. Using a #2 Phillips screwdriver, release the captive screws that attach the carrier to the system.
3. Pull the carrier out of the system by the handle. See Figure 3-7.

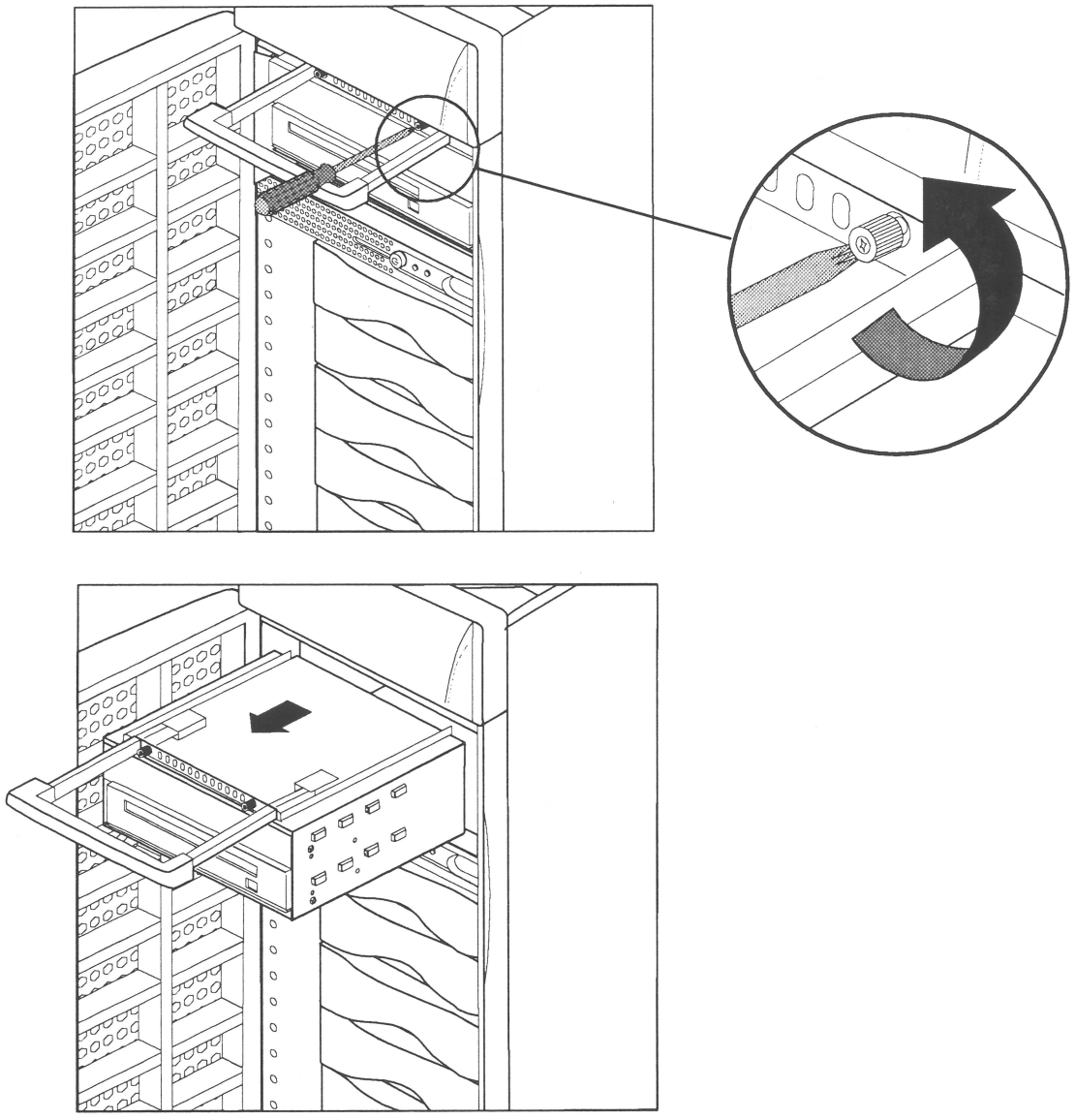

Figure 3-7 Removing the 5.25-Inch Peripheral Carrier

Install the 5.25-inch drive in the carrier. The carrier can hold one full-height drive or two half-height drives. Follow these steps to install the drive in the carrier:

1. Remove one or two of the blanking plates from the front of the carrier, depending upon whether you are installing a half-height or a full-height drive.
2. Using a #2 Phillips screwdriver, remove the screws that hold the access plate to the rear of the carrier, then remove the access plate. See Figure 3-8.

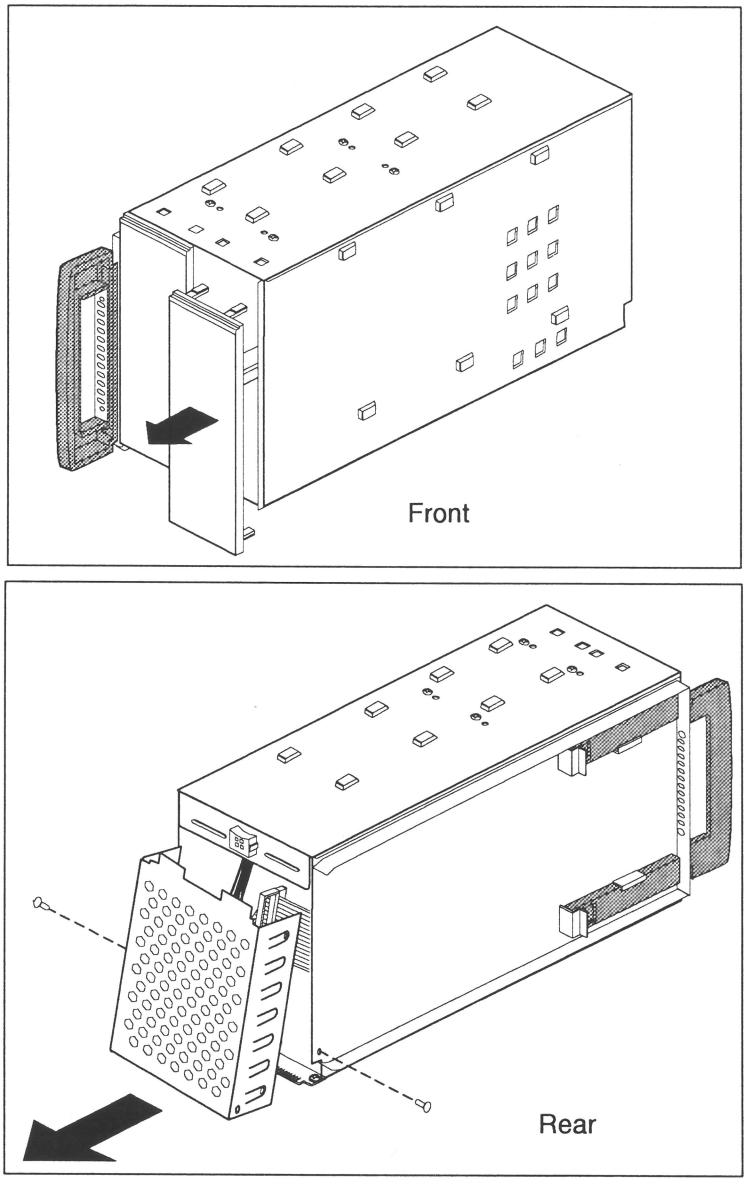

Figure 3-8 Removing a Blanking Plate and the Rear Access Plate from the Peripheral Carrier

3. Slide the drive into the peripheral carrier and attach it with four screws through the side of the carrier, as shown in Figure 3-9.
   - If the drive you are installing is a 1-inch high peripheral, there will be a gap in the front of the carrier not covered by the face of the drive. Cover this gap with one of the narrow blanking plates shipped with the server.
   - When installing the drive, be careful to keep track of its orientation in the carrier so that you do not install the drive upside down.

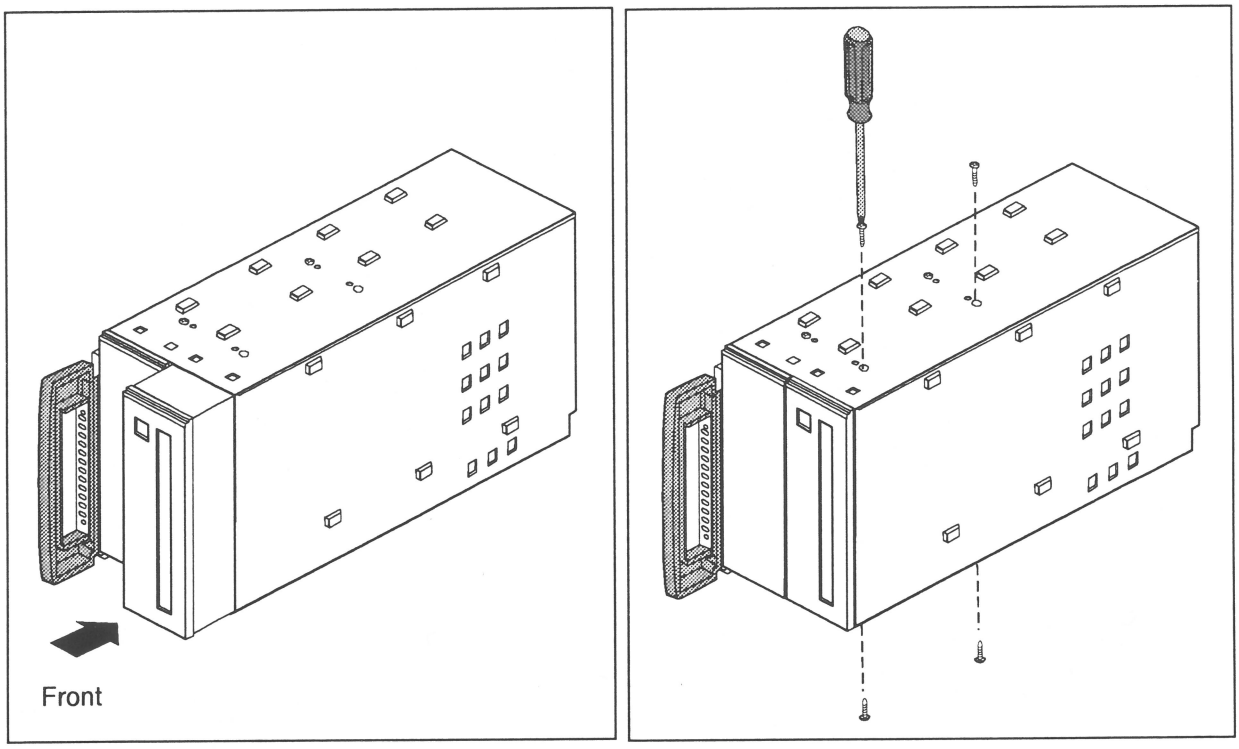

Figure 3-9 Inserting a 5.25-Inch Drive in the Peripheral Carrier

4. Attach one of the power connectors at the rear of the carrier to the drive. Use whichever connector fits conveniently for the position of the drive's power recepticle. See Figure 3-10.

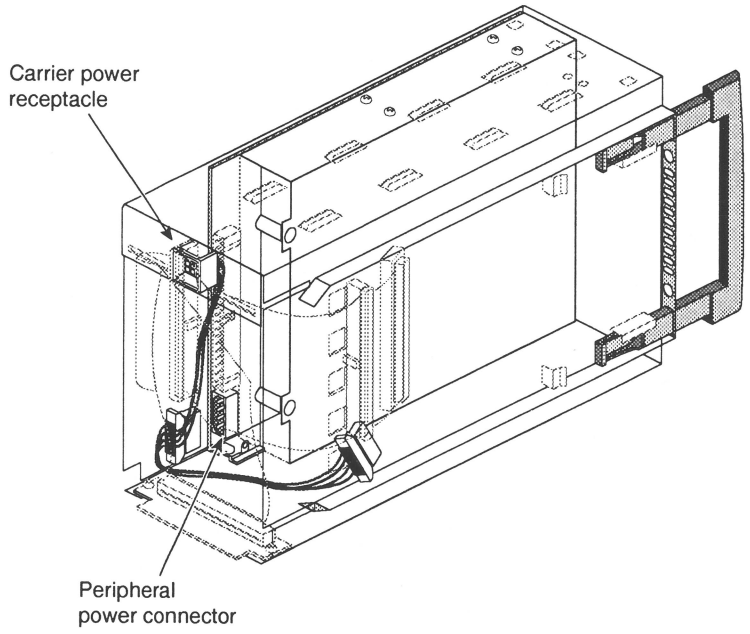

Figure 3-10 Attaching a Power Connector to a 5.25-inch Drive

5. Attach one of the connectors on the SCSI cable to the drive. Use whichever connector fits fits conveniently for the position of the drive's SCSI connector. See Figure 3-11.
   - Tuck the unused connector and terminator inside the carrier.

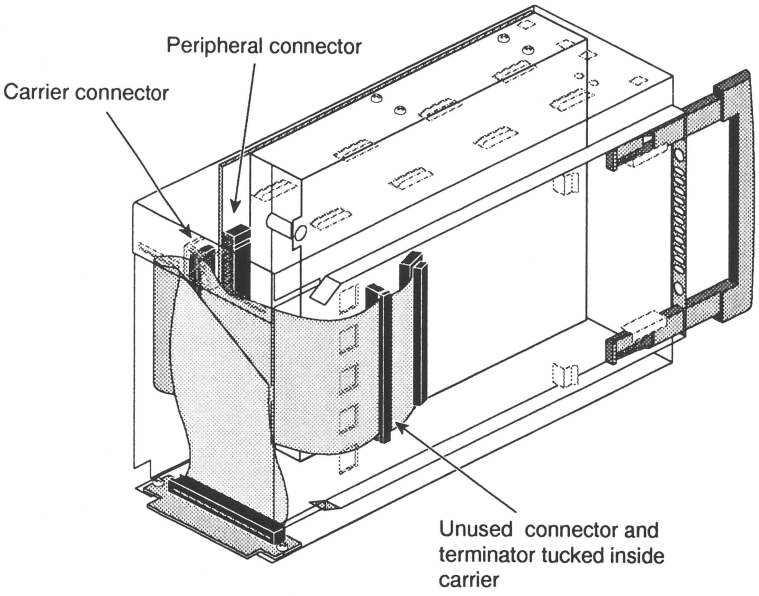

Figure 3-11 Attaching the SCSI Cable to a 5.25-Inch Drive

6. Replace the access plate. See Figure 3-12.
   - The plate should cover all of the loose wires (power and SCSI) at the rear of the carrier.

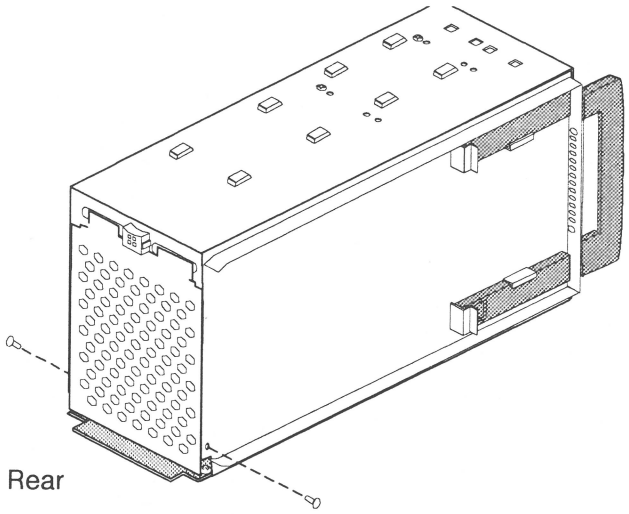

Figure 3-12 Replacing the Rear Access Plate on the Peripheral Carrier

Note: Be sure to reinstall the access plate on the rear of the carrier. The plate protects the power and SCSI cables from damage when you slide the carrier into the system.

7. Slide the carrier into the system, secure it with the captive screws, and push in the retractable handle. See Figure 3-13.

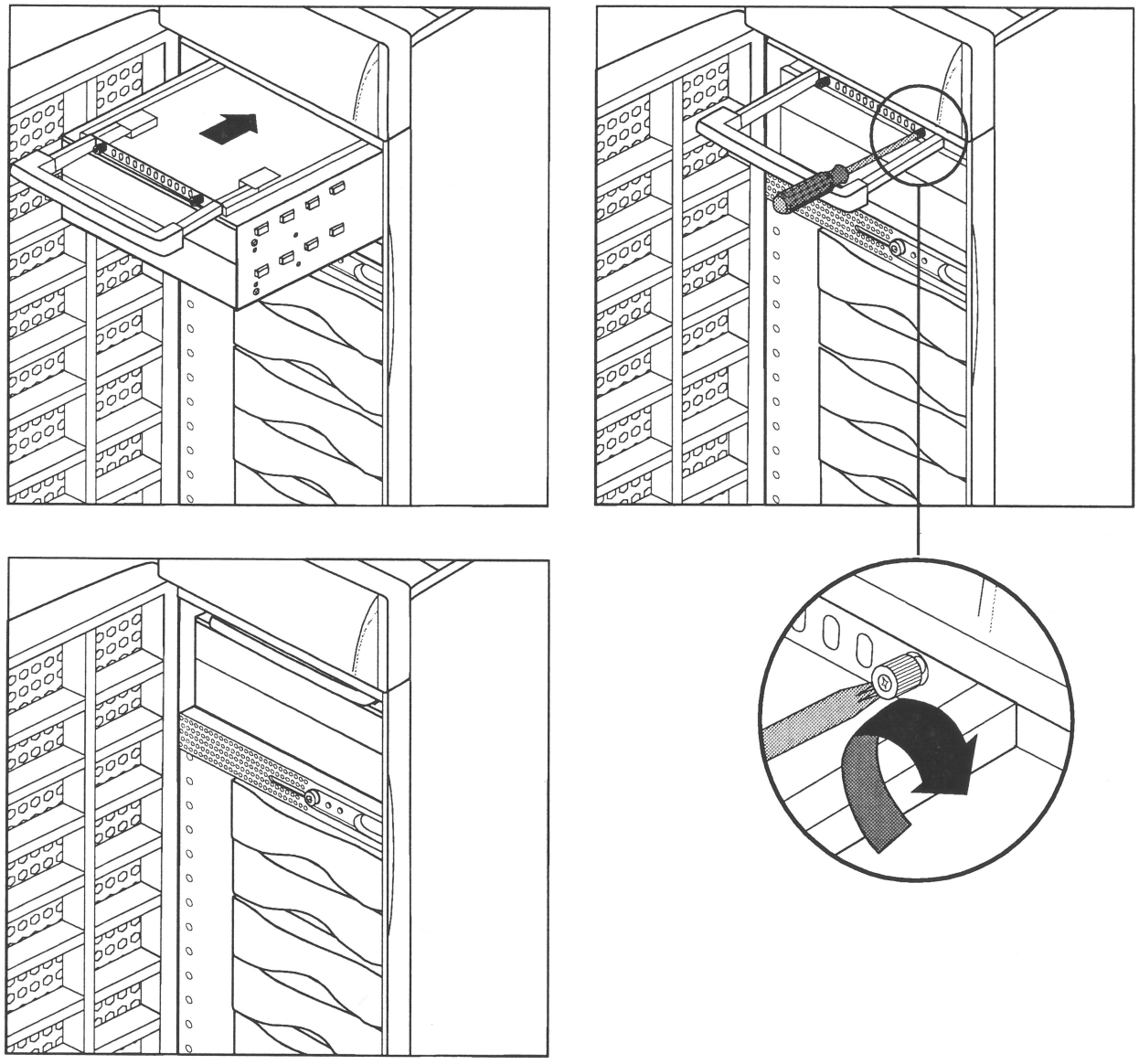

Figure 3-13 Replacing the 5.25-Inch Peripheral Carrier

3.2.6 Attaching an Ethernet Networking Cable

Figure 3-14 shows how to attach an Ethernet 10-Base-T or 100-Base-TX cable to an Origin200 module.

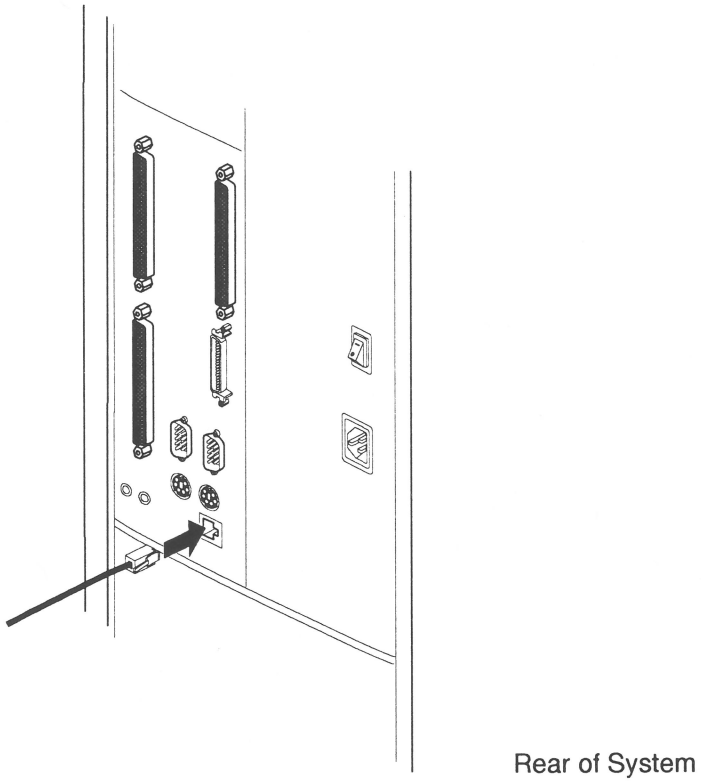

Figure 3-14 Attaching an Ethernet Networking Cable to An Origin200 module

Note: Category 5 wiring is required for proper 100-Base-TX operation.

3.2.7 Attaching the System Console

Connect the RS-232 serial cable (provided) to an ASCII terminal. The cable is approximately 10 feet (3 meters) long. Plug the D-shaped, 9-pin connector into serial port 1 on the back of the system, as shown in Figure 3-15.

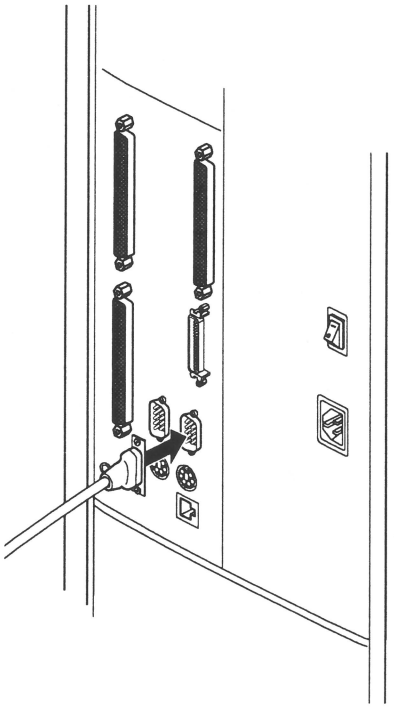

Figure 3-15 Attaching the Serial Cable

Connect the other end of the serial cable, which has a D-shaped, 25-pin connector, to a serial (ASCII) terminal.

You can use a computer, such as an IBM®-compatible or Macintosh®, or a workstation, such as a Silicon Graphics O2™ or Indy™, as the system console instead of an ASCII terminal. For more information, see "Using Another Computer or Workstation as the System Console" in Chapter 6.

3.2.8 Connecting Two Origin200 Modules

When you connect two Origin200 modules together using a CrayLink Interconnect cable, one module becomes the master and the other becomes the slave. This relationship is set by a DIP switch located on the module system controllers (MSC) of the each machine, and has the following features:

- Only the master module can have a system console.
- The master module controls the power-on and power-off sequence.
- You can communicate with the module system controller (through the AUX port) in the master, but not the slave module.

- Both master and slave modules must have memory (DIMMs) installed in them.
- The slave module does not require any disk drives.



Warning: **Any difference in ground potential greater than 500 millivolts (0.5 volts) between two chassis connected together with CrayLink Interconnect cables can cause severe equipment damage, and can create hazardous conditions.**

Follow these steps to connect two Origin200 modules:

1. If the slave system is in a tower configuration, remove the side panel as shown in Figure 3-16.
   - Remove the two screws at the top rear and bottom rear of the side panel.
   - Lift the side panel slightly away from the chassis, then slide it back towards the rear of the system and away.

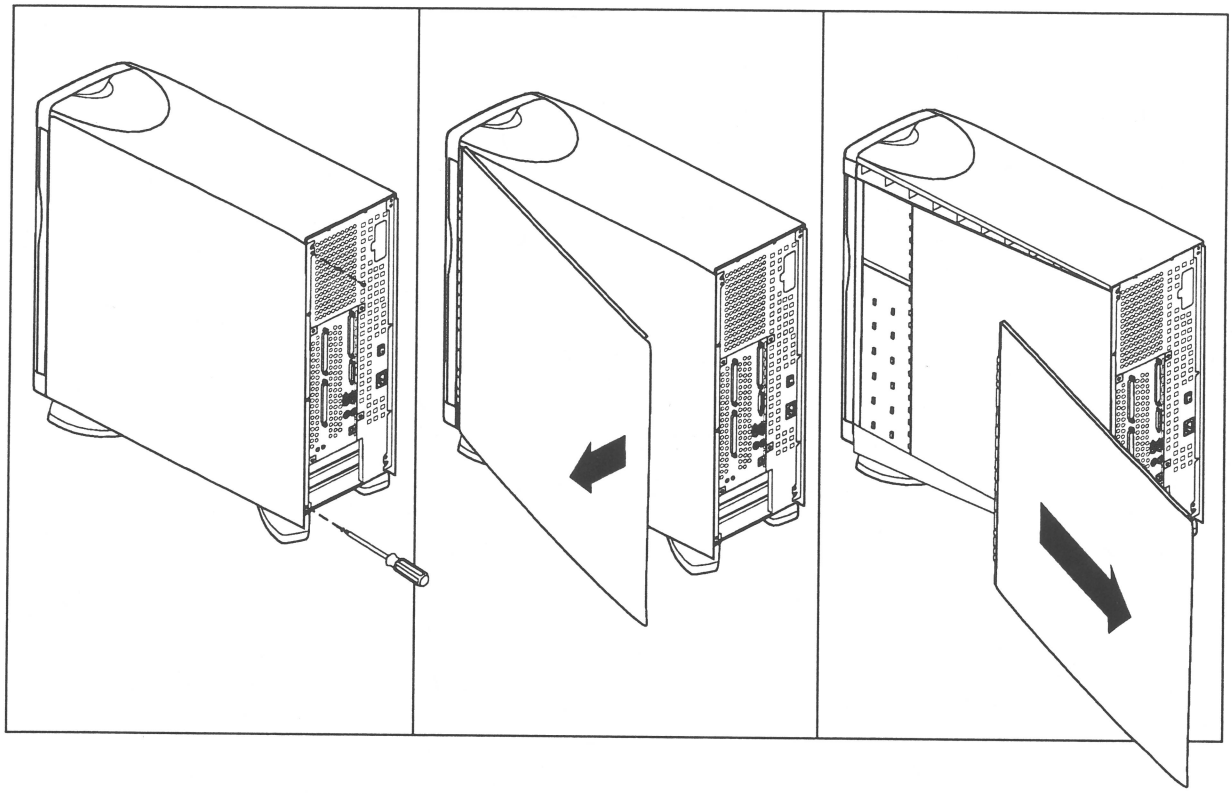

Figure 3-16 Removing the Side Panel of the Second (Slave) Module

2. Remove the module system controller (MSC) access plate, as shown in Figure 3-17
   - Remove the single screw that attaches the plate to the chassis.
   - Swing the plate out and away.

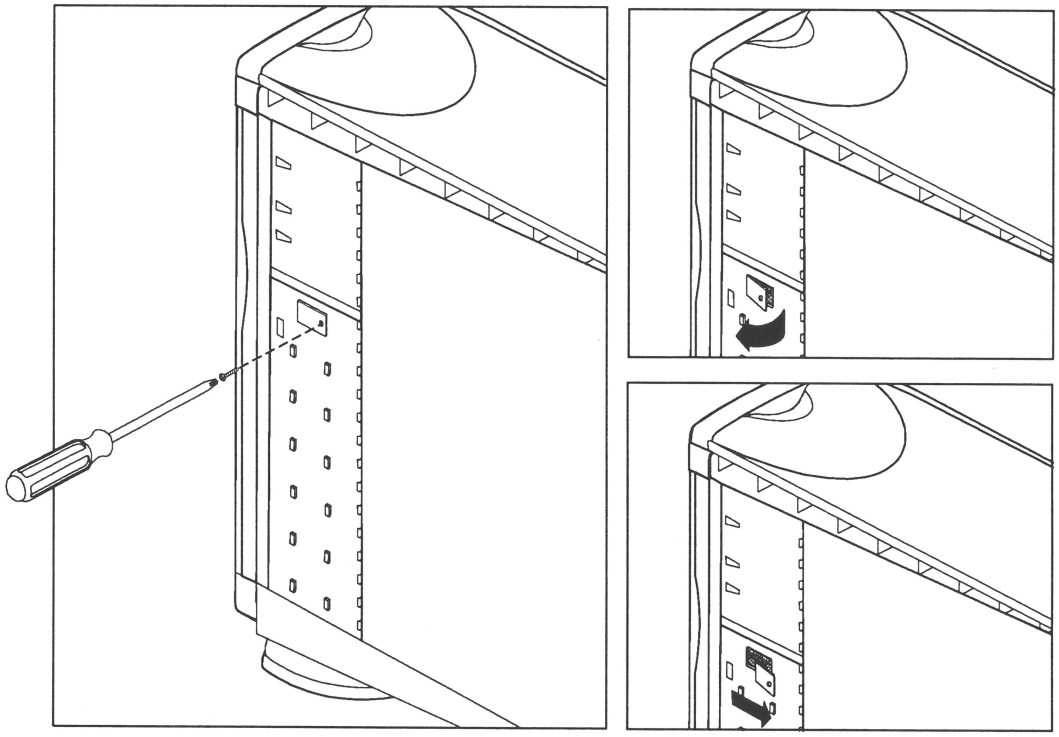

Figure 3-17 Removing the Module System Controller (MSC) Access Plate

3. Locate the MSC DIP switch, as shown in Figure 3-18.

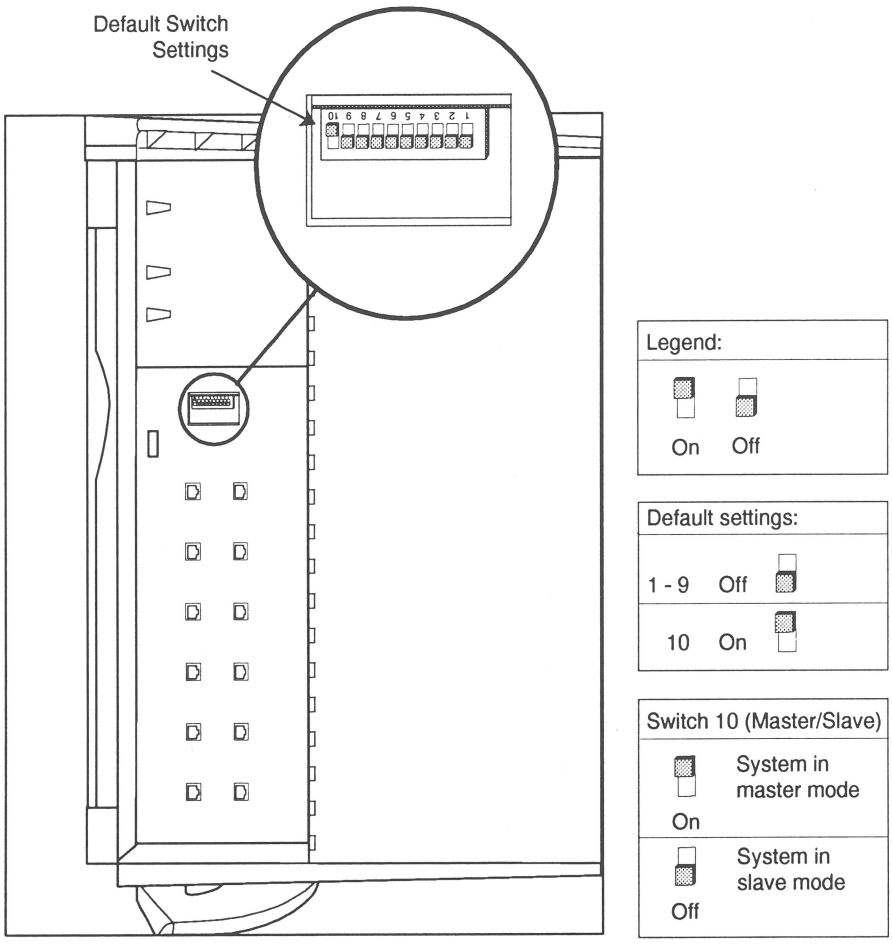

Figure 3-18 MSC DIP Switch Location and Settings

4. Using a ballpoint pen or similar, change switch 10 to "off" to place this module in slave mode. See Figure 3-18.
5. Replace the MSC access plate and, if this is a tower system, replace the side panel.

6. Connect the grounding cable between the two chassis, as shown in Figure 3-19. Do this first, before you connect the CrayLink Interconnect cable.

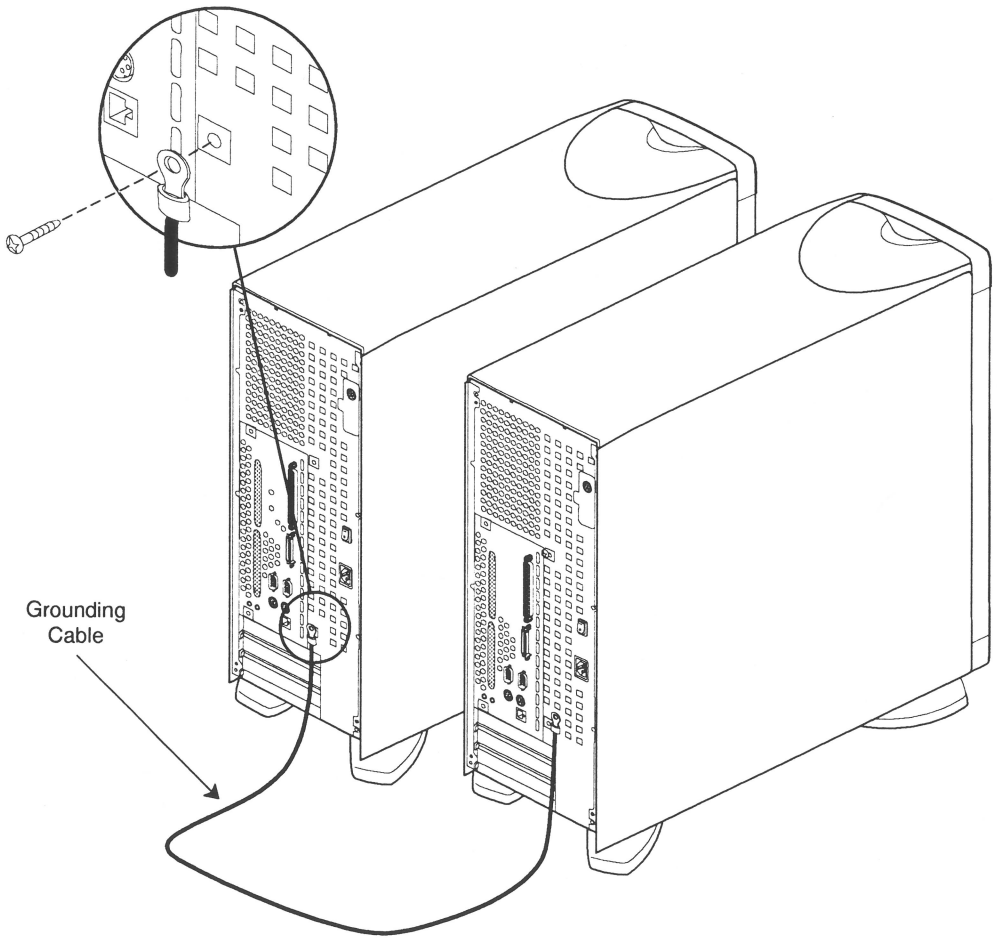

Figure 3-19 Attaching the Grounding Cable

7. Connect the two modules with the CrayLink Interconnect cable, as shown in Figure 3-20. Be sure to tighten the thumbscrews on the connectors for proper Craylink operation.

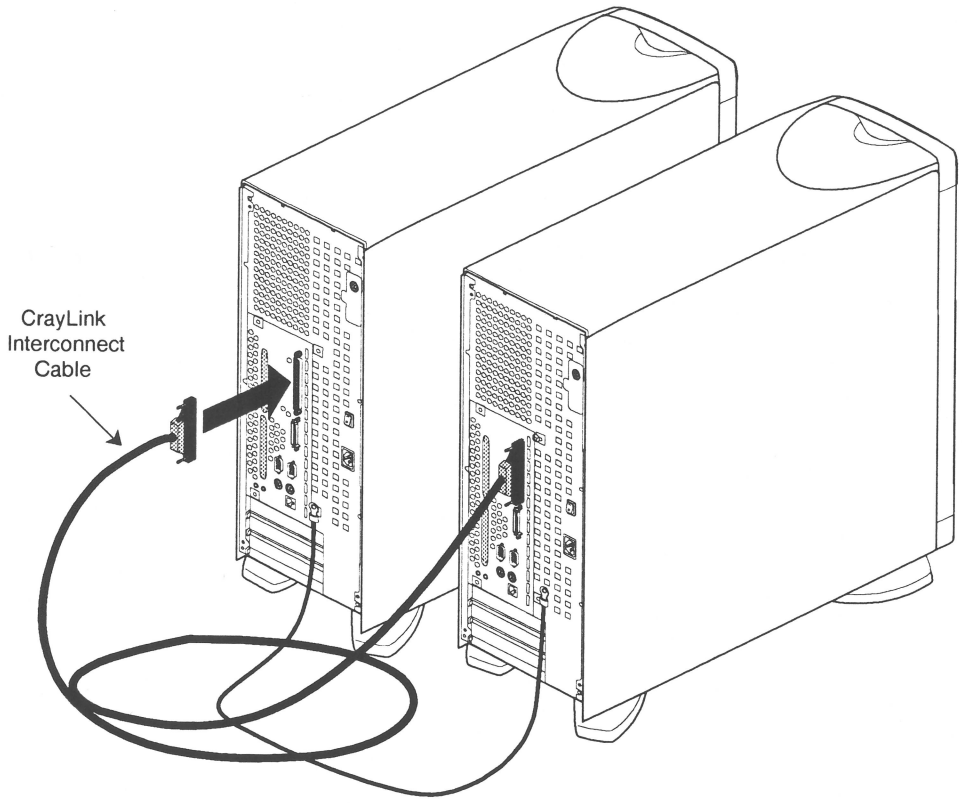

Figure 3-20 Attaching the CrayLink Interconnect Cable



Warning: **Always attach the grounding cable before the CrayLink Interconnect cable. Otherwise, you may damage the server.**

You are finished connecting the modules. You can now turn on the system.

3.3 Turning On the System

Follow these steps to turn on the system:

1. At the rear of the system, turn the master power switch on, as shown in Figure 3-21.

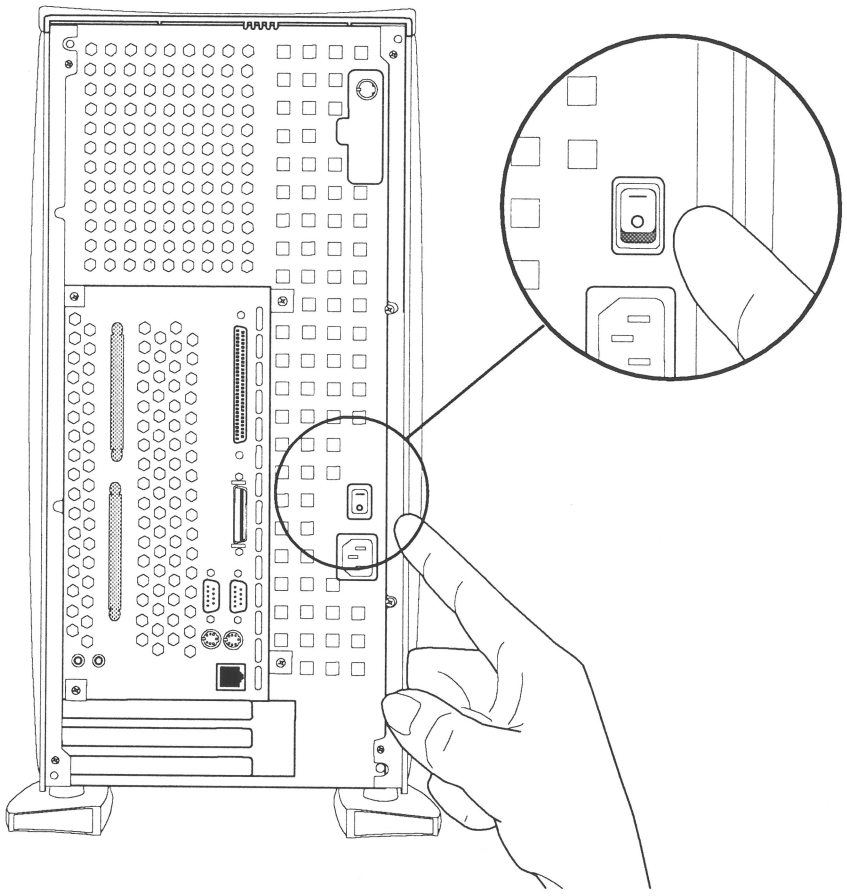

Figure 3-21 Turning On the Master Power Switch

- If you have a two-module system, turn on the master power switches for both modules. It does not matter which you turn on first.
- When you turn on the master power switch, the status LED on the front panel flashes green momentarily.

2. At the front of the system, press the power button, as shown in Figure 3-22.

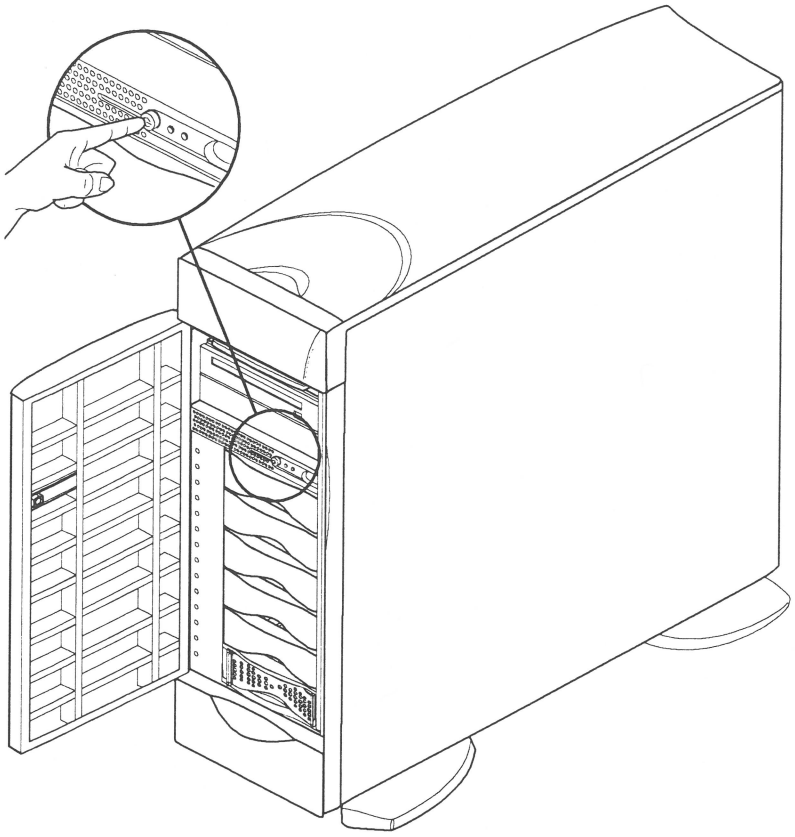

Figure 3-22 Turning On the Front Power Switch

- In a two-module system, press the front power switch on the master module.
- Press the button far enough to feel a slight "click."
- After you press the button, the status LED blinks green, then turns solid green as the system boots.
- As the system boots, power is applied to the 3.5-inch drives in order, starting with the drive in slot 1 (the system disk) and proceeding to slot 6. After the 3.5-inch drives, power is applied to the 5.25-inch drives.

Chapter 4

Setting Up an Origin Vault Expansion Option

This chapter describes how to set up an Origin Vault standalone tower or rackmountable enclosure. It contains

- Section 4.1, "Safety Considerations"
- Section 4.2, "Choosing a Location for the Origin Vault Tower"
- Section 4.3, "Unpacking the Origin Vault"
- Section 4.4, "Jumpering the 3.5-Inch SCSI Device ID Range"
- Section 4.5, "Installing the Origin Vault Enclosure in the Rack"
- Section 4.6, "Installing 3.5-Inch Drives"
- Section 4.7, "Installing 5.25-Inch Options"
- Section 4.8, "Cabling the Tower"
- Section 4.9, "Turning On the Origin Vault Expansion Option"
- Section 4.10, "Verifying Drive Installation"
- Section 4.11, "Configuring Drives"



Warning: **Removing the Origin Vault option from its package or lifting an Origin Vault rackmountable enclosure into a rack requires two people.**

4.1 Safety Considerations

When setting up an Origin Vault tower, keep in mind the following.

- Removing the Origin Vault option from its package requires two people.
- When opening the chassis to install or remove peripherals, always observe proper electrostatic discharge (ESD) procedures. Make sure you are properly grounded with a wrist or heel strap before handling drive assemblies.

  Note: All Silicon Graphics peripheral upgrade options are shipped with wrist straps.

For further considerations for the Origin Vault tower, see the next section, "Choosing a Location for the Origin Vault Tower."

4.2 Choosing a Location for the Origin Vault Tower

Follow these guidelines:

- If the standalone tower is connected to an Origin200 system, both systems must be plugged into the same grounded power circuit; otherwise, damage can result to components on the Origin200 system main system board.
- Be sure that there is a properly rated electrical outlet available near enough for the power cable to reach.
- Use an uninterruptable power supply when possible.
- Make sure that the surface on which you place the tower can support at least 60 lbs (27 kg) over an area of 9.25 inches (23.5 cm) by 26.5 inches (67.3 cm). These dimensions take into account the widest setting for the tower feet.
- Select a site that is clean and dust-free and that does not produce excessive vibration or other extreme conditions.
- Provide four inches (2.5 cm) clearance around all sides of a tower for proper air flow.

For more information, consult *Site Preparation for Origin Family and Onyx2* (007-3452-001).

4.3 Unpacking the Origin Vault

Move the box(es) to the site you have selected (Origin Vault tower) or to the Origin Rack location (Origin Vault rackmountable chassis).

Remove the Origin Vault option from its packing.



Warning: Removing the Origin Vault option from its package requires two people.

For the standalone tower:

- If you are resetting the 3.5-inch drive device IDs from the default (1 through 6) to 9 through 14 (such as for installations in which one host accesses two Origin Vaults), proceed to the next section, "Jumpering the 3.5-Inch SCSI Device ID Range."
- If you are not resetting 3.5-inch drive device IDs, swivel the feet out to the position you want and proceed to the section "Installing 3.5-Inch Drives."

If you have a rackmountable chassis, set it flat on a work surface with the door facing out, as shown in Figure 4-1.

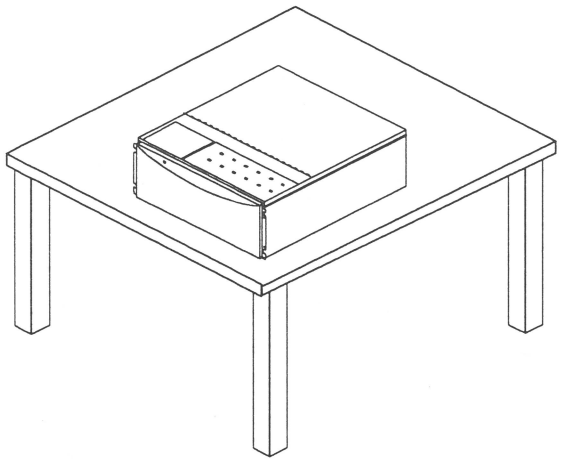

Figure 4-1 Rackmountable Origin Vault Option

If you are resetting the 3.5-inch drive device IDs from the default (1 through 6) to 9 through 14, proceed to the section "Jumpering the 3.5-Inch SCSI Device ID Range." Otherwise, proceed to the section "Installing the Origin Vault Enclosure in the Rack."

4.4 Jumpering the 3.5-Inch SCSI Device ID Range

The default SCSI device IDs for the drives are 1 through 6, starting at the drive farthest from the on/off button. For installations in which one host uses two Origin Vaults, you can reset the drives to a higher range of SCSI IDs, namely 9 through 14. To do so, follow these steps:

1. Have ready a #2 Phillips screwdriver, a pair of needle-nosed pliers and a jumper that can connect two pins.
2. For an Origin Vault tower, remove the side panels, as shown in Figure 4-2.

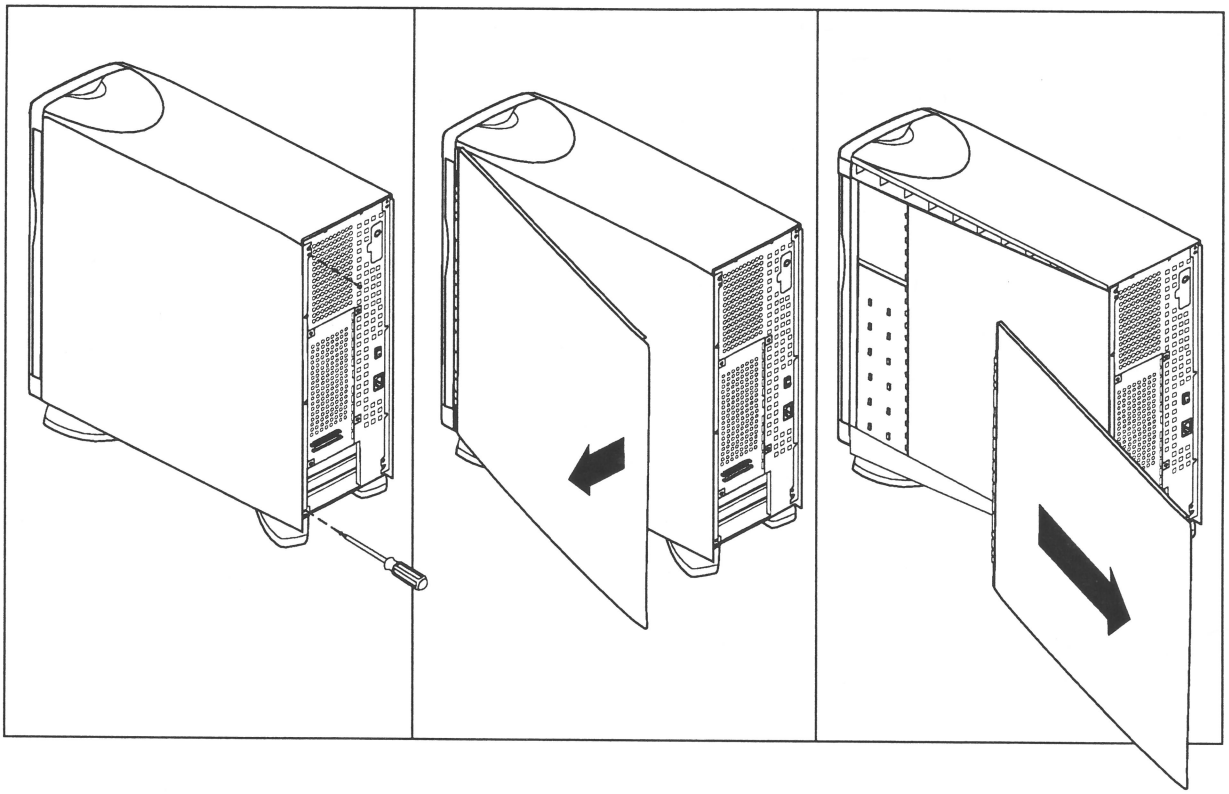

Figure 4-2 Removing Tower Side Panels

3. Lay the tower or rackmountable enclosure on a work surface with the top cover facing up, as shown in Figure 4-1.
4. Remove the two screws at the rear of the chassis that secure the top cover and remove the top cover. See Figure 4-3.

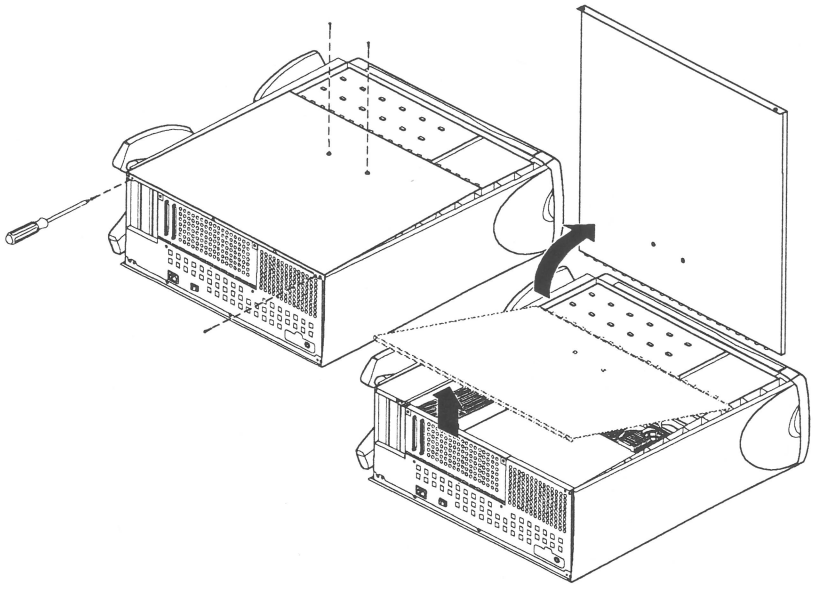

Figure 4-3 Removing the Origin Vault Cover

Be careful not to touch components within the chassis.



Warning: **Do not attempt to open the power supply at any time.**

5. Ground yourself with a wrist strap, as shown in Figure 4-4. The grounding strap is included in the Origin Vault shipment.

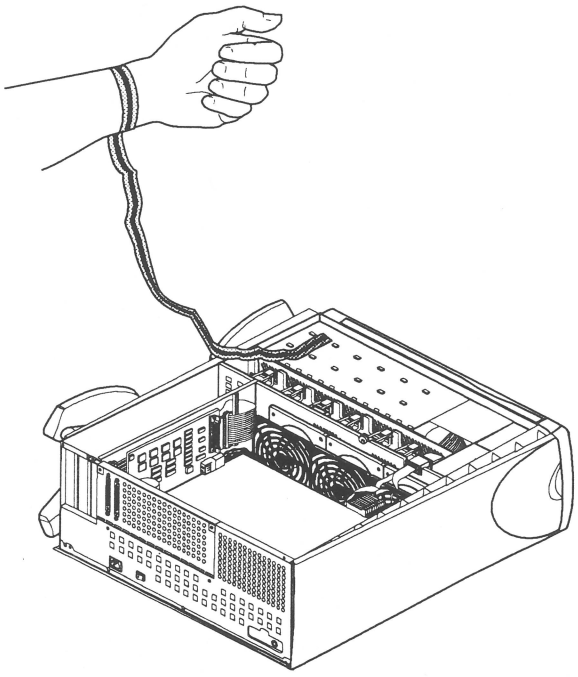

Figure 4-4 Attaching the Grounding Strap

6. Locate the ID-setting pins near the outer edge of the 3.5-inch backplane; see Figure 4-5.

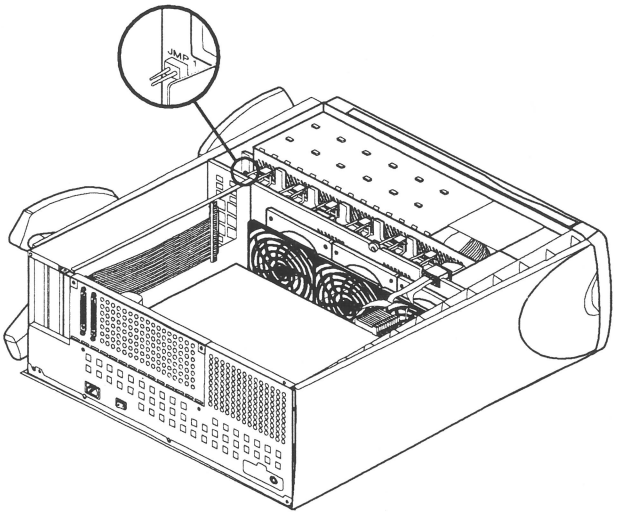

Figure 4-5 SCSI Device ID Resetting Pins

7. Using the needle-nosed pliers, slide the jumper over the two pins. See Figure 4-6.

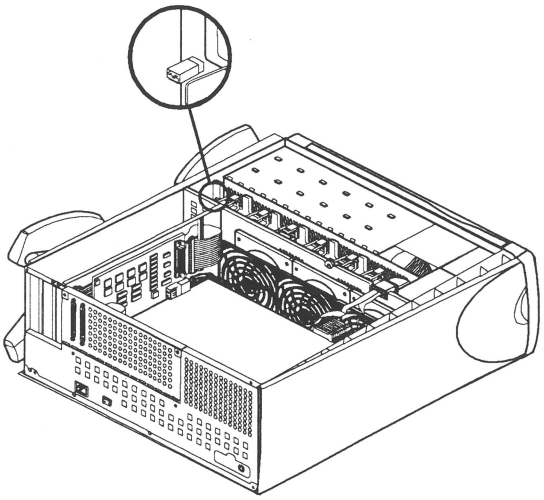

Figure 4-6 Setting 3.5-Inch Drive Device Numbering to 9 through 14

8. Remove the grounding strap and close the Origin Vault, reversing the procedures in step 4.

   If you are setting up an Origin Vault tower, replace the side panels, set the tower upright, and, if desired, adjust the tower feet. Skip the next section and proceed to "Installing 3.5-Inch Drives."

   If you are setting up a rackmountable enclosure, proceed to "Installing the Origin Vault Enclosure in the Rack."

4.5 Installing the Origin Vault Enclosure in the Rack

Warning: **Lifting the Origin Vault rackmountable enclosure into a rack requires two people.**

Installing the Origin Vault enclosure in a rack is describes in these sections:

- Section 4.5.1, "Attaching Mounting Hardware to the Enclosure"
- Section 4.5.2, "Installing Rails in the Rack"
- Section 4.5.3, "Securing the Enclosure in the Rack"
- Section 4.5.4, "Cabling the Enclosure"

These procedures require a #2 Phillips screwdriver.

Note: The Origin Vault enclosure package includes a 10-meter cable. If the host to which you are cabling the Origin Vault enclosure is in the same rack and you wish to use a shorter cable, order the 1-meter or 2-meter cable (marketing code X-S-1M and X-S-2M, respectively).

4.5.1 Attaching Mounting Hardware to the Enclosure

Mounting hardware—two mounting ears and two caps to cover them—are included in the Origin Vault enclosure shipment. The mounting ears are stamped "L" and "R" for left and right; they are not interchangeable. See Figure 4-7.

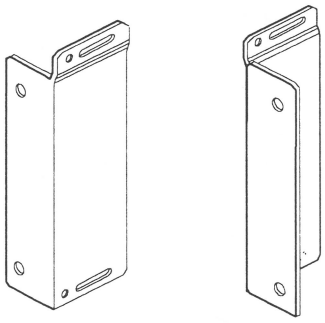

Figure 4-7 Mounting Ears

Using a #2 Phillips screwdriver and the screws provided with the Origin Vault enclosure, fasten an appropriate ear to each side of the enclosure behind the front flange, as shown in Figure 4-8. Use two screws for each mounting ear.

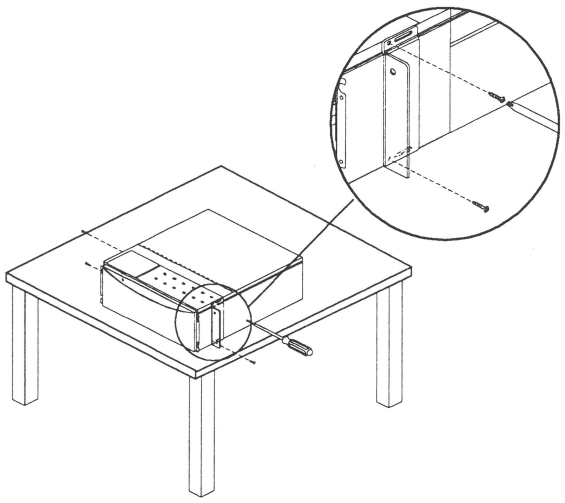

Figure 4-8 Attaching Rackmounting Hardware

4.5.2 Installing Rails in the Rack

Rails to support the enclosure in a rack are included in the Origin Vault enclosure shipment. Fasteners to attach the side rails to the rack and screws to secure the mounting ears to the rack are provided with the rack.

Your equipment rack should provide front and rear access. The rear is where the main power switch is located, as well as all of the connectors.

To install rails in the rack, follow these steps:

1. Open the front and rear of the rack. Plan where in the rack to install the enclosure. Figure 4-9 shows example locations in an Origin Rack.

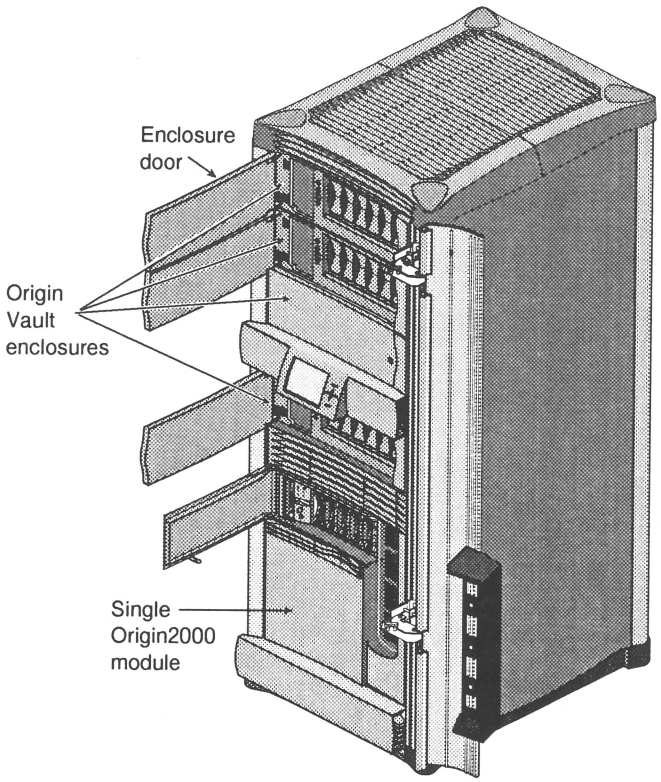

Figure 4-9 Example Origin Vault Enclosure in Origin Rack

Figure 4-10 shows example rail placement in an Origin Rack, with other features.

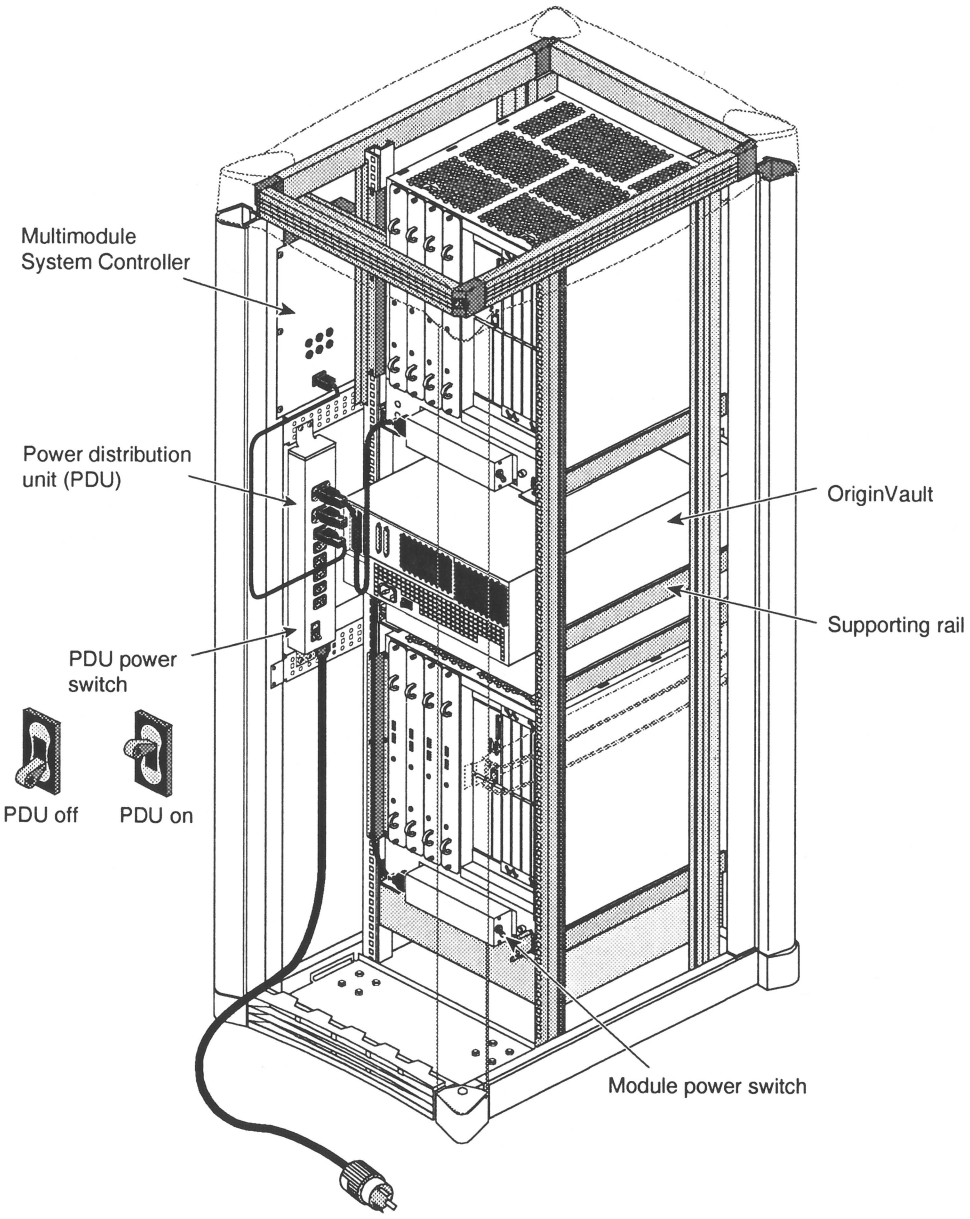

Figure 4-10 Example Rail Placement for Origin Vault in Origin Rack

2. Power off the rack, following procedures outlined in its manual.
3. Select a bay in the rack in which to install the Origin Vault; remove the filler panel for this bay.
4. Install the side rails in the Origin Rack. These rails are included in the Origin Vault enclosure option.

4.5.3 Securing the Enclosure in the Rack

Follow these steps:

1. If the front door of the Origin Vault rackmountable enclosure is not locked, use the key to lock it so that the door cannot be pulled open accidentally when the enclosure is being installed.



Warning: **Lifting the Origin Vault rackmountable enclosure into a rack requires two people.**

If the enclosure contains peripherals, you can remove them to lighten the enclosure before you install it.

2. With a person on each side of the enclosure, lift it into the front of the rack, as shown in Figure 4-11. Place it on top of the side rails and slide it back into the rack.

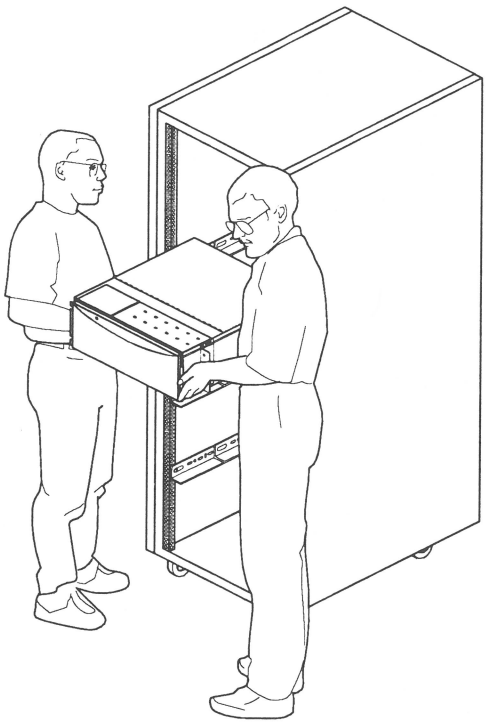

Figure 4-11 Lifting the Origin Vault Enclosure Into a Rack

3. Attach the enclosure to the rack, using the screw and fastener combination appropriate for the rack.
4. Attach the plastic end caps to the front of the enclosure to conceal the mounting flanges.

   Figure 4-12 shows end caps for a 21-inch rack; those for a 19-inch rack are smaller.

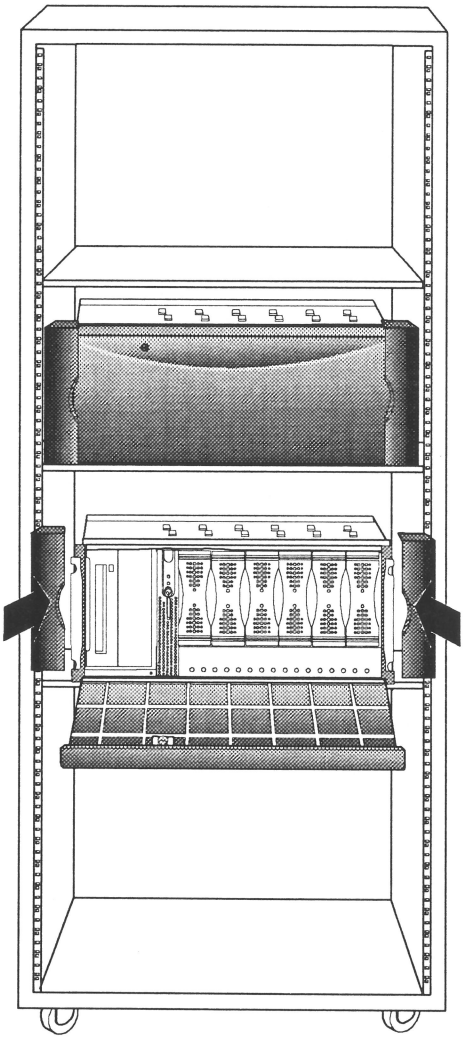

Figure 4-12 Attaching End Caps (21-Inch Rack)

4.5.4 Cabling the Enclosure

Before you cable the Origin Vault enclosure, note the following:

- The Origin Vault enclosure package includes a 10-meter cable. If the host to which you are cabling the Origin Vault enclosure is in the same rack and you wish to use a shorter cable, order the 1-meter or 2-meter cable (marketing code X-S-1M and X-S-2M, respectively).
- Make sure the SCSI channel you are using on the host system matches the type of expansion option you ordered.

  Caution: If you connect a differential SCSI cable to a single-ended expansion option, the entire differential bus shuts down. If you connect a single-ended SCSI cable to a differential expansion option, none of the drives in the Origin Vault work.

By default, the Origin2000 host system SCSI connector is single-ended. Ultra SCSI XIO board output channels 0, 1, 2, and 3 are differential; channel 0 is autosensing to work with either differential or single-ended SCSI devices.

Figure 4-13 shows the SCSI connectors on the enclosure rear.

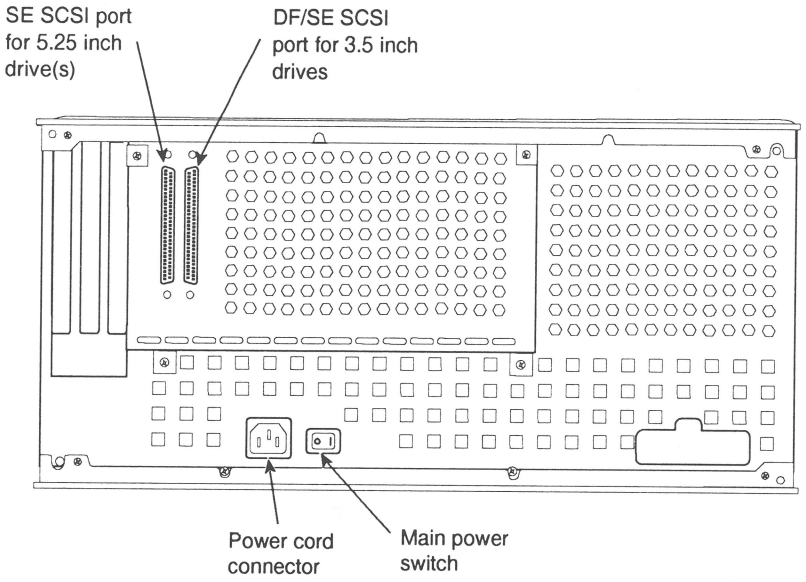

Figure 4-13 Origin Vault Rackmountable Enclosure Rear View

To cable the enclosure, follow these steps:

1. Connect the Origin Vault power cord to the Origin Rack power distribution unit, as shown in Figure 4-14.

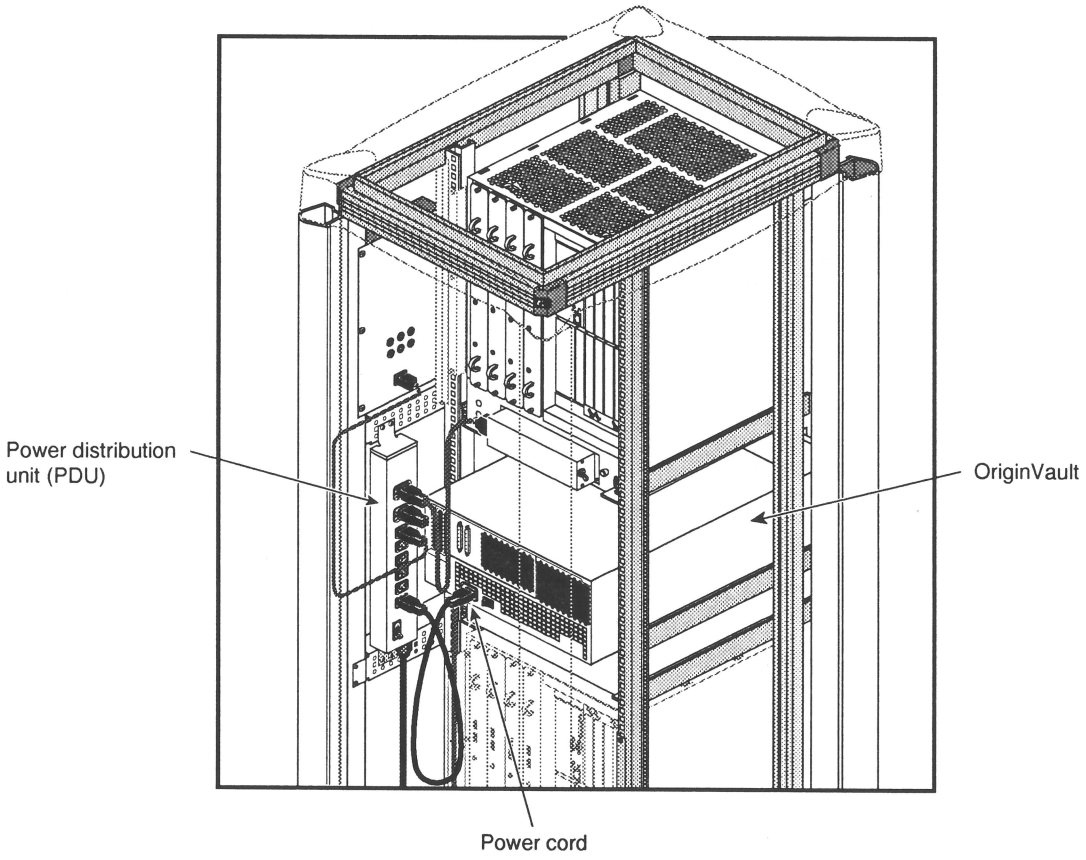

Figure 4-14 Connecting the Rackmount Power Cable

2. If the host is in the same rack, cable the SCSI connection thus:

   - Single-ended: Use the optional 1-meter SCSI cable to connect the 3.5-inch drive controller port to the host. Figure 4-15 shows a connection to the SCSI port on the Origin2000 IO6 board; you can also cable it to a single-ended SCSI port on an option board, such as channel 0 on the optional Ultra SCSI XIO board or PCI option PCI-SCSI-Q-SE-1P.

     If peripherals are present in the 5.25-inch drive bay, connect this controller port to a single-ended SCSI port in the host.

   - Differential: Use the 10-meter SCSI cable (or 1-meter cable option, if you have ordered it) to connect the 3.5-inch drive controller to the host, as shown in Figure 4-15. You can also cable it to a differential SCSI port, such as any channel on the Ultra SCSI XIO board, or the port on the PCI option PCI-SCSI-Q-DF-1P option.

   If the Origin Vault enclosure is interfacing with the Ultra SCSI option board, you cable the Origin Vault SCSI to a SCSI connector of one of the Y cables supplied with the Ultra SCSI board option.

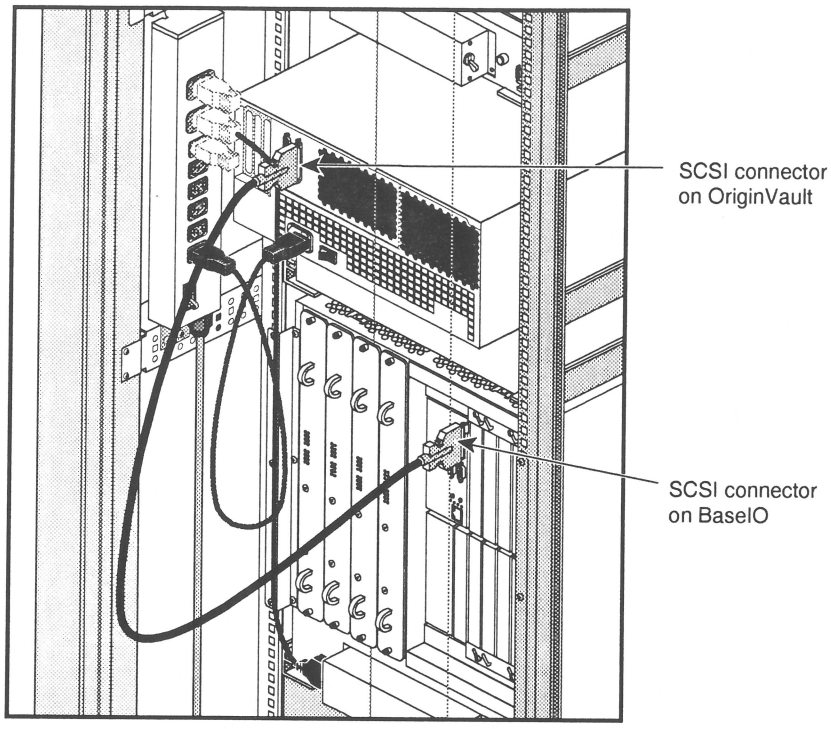

Figure 4-15 Connecting the Rackmount SCSI Cable to an Origin2000 Host

For a differential Origin Vault, if the host is not in the same rack, use the 10-meter SCSI cable supplied with the enclosure to connect the 3.5-inch drive controller to a differential SCSI connector in the host. Figure 4-16 shows cabling to a differential PCI option board in an Origin200 tower.

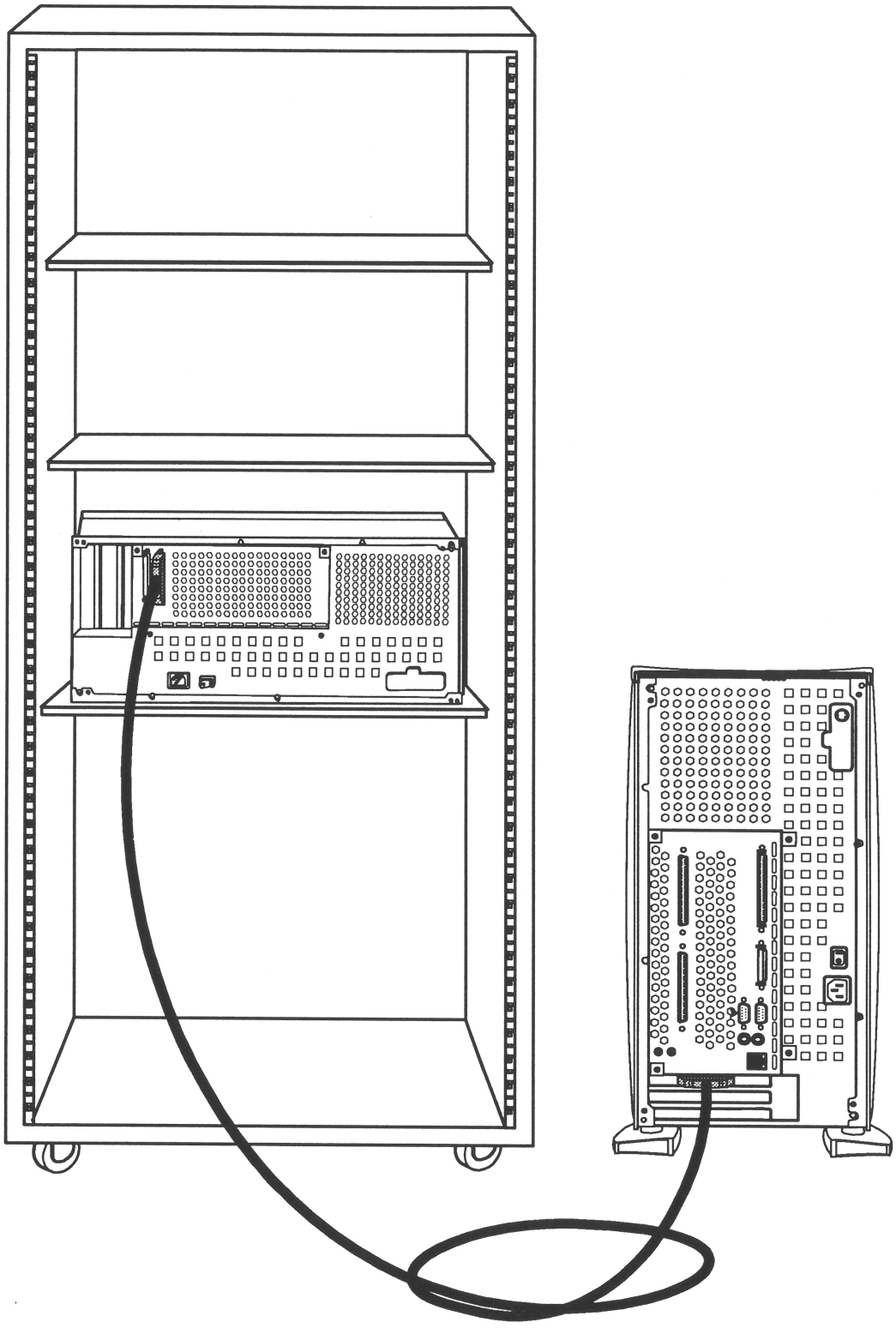

Figure 4-16 Connecting the Rackmount SCSI Cable to a Host (Not in Same Rack)

4.6 Installing 3.5-Inch Drives

The SCSI device IDs of the 3.5-inch bays in the Origin Vault are numbered 1 through 6, starting farthest from the power button. The SCSI backplane automatically sets the SCSI ID of the disk drive in each bay, although you can change the range of the SCSI IDs to 9 through 14 with a jumper on the SCSI backplane. See "Jumpering the 3.5-Inch SCSI Device ID Range," earier in this chapter.

Disk drives ordered from Silicon Graphics are preconfigured; you can install them in the bays with no additional configuration. If you are installing third-party peripherals, or wish to change the configuration of a Silicon Graphics-supplied drive, follow these guidelines:

- Set the drive (motor) start jumper to start on command from the host. Do not configure the drive to start as soon as power is applied, since this setting may draw too much current when the system is first turned on. Options from Silicon Graphics have this jumper set correctly.

To install a 3.5-inch drive, follow these steps:

1. At the back of the tower or chassis, make sure that the master power switch is turned off, as shown in Figure 4-17.

   Note: The master power switch is a circuit breaker that cuts off all power to the Origin Vault system. Residual power is still supplied to the unit as long as the master power switch at the rear is on; pressing the power button at the front is a soft power down.

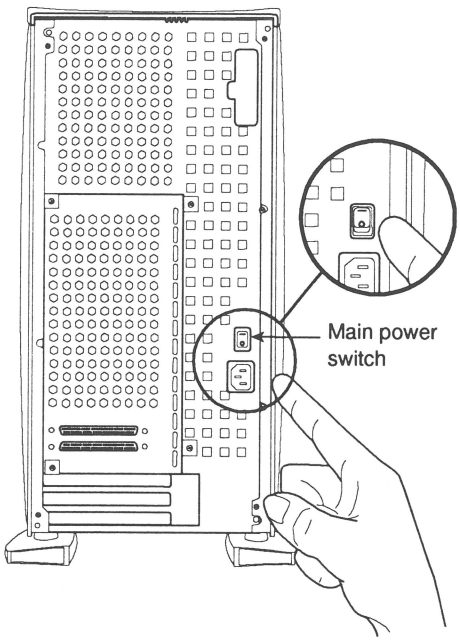

Figure 4-17 Turning Off the Master Power Switch

2. Unlock and open the Origin Vault front door using the key included with the option.
3. Attach the grounding strap to ground yourself to a metal part of the Origin Vault.

4. For each drive you are installing, remove a blanking panel from a drive bay, starting with the bay farthest from the on/off button. See Figure 4-18.

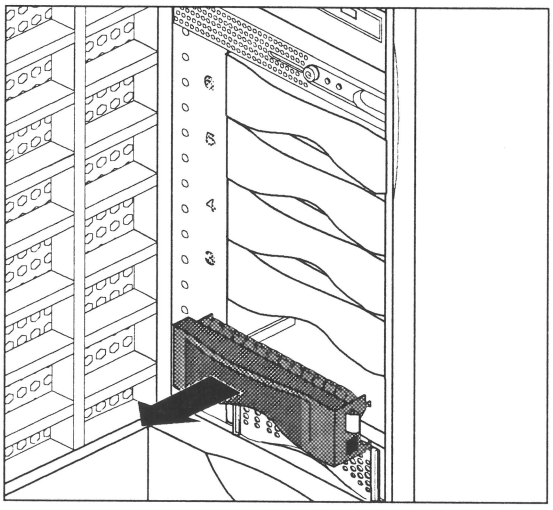

Figure 4-18 Removing a Blanking Panel for a 3.5-Inch Drive

Note: Save the blanking panel(s) you remove. If you need to remove a drive and do not replace it with another one, you must reinstall the blanking panel to ensure proper cooling and electromagnetic interference (EMI) shielding in the Origin Vault chassis.

5. Insert each drive sled into a bay until it is almost flush with the edge of the drive bay, as shown in Figure 4-19 and Figure 4-20.

   Latch the drive: For a tower, pull the handle up to latch the drive; for an enclosure in a rack, pull the handle to the left.

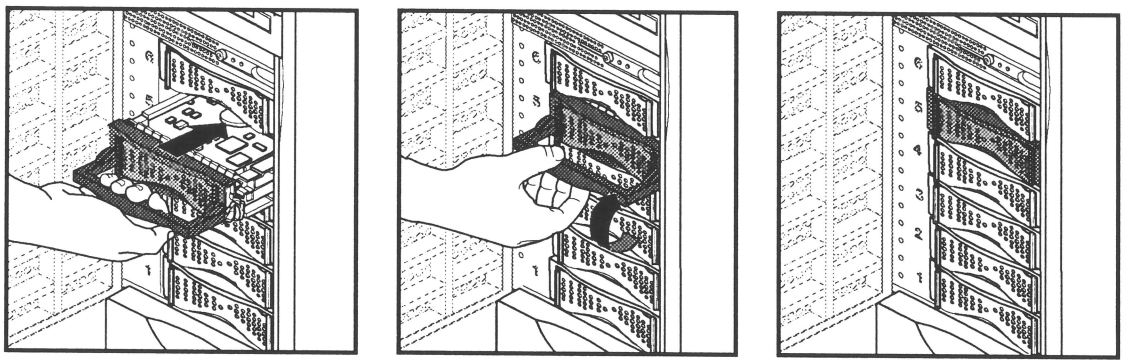

Figure 4-19 Inserting a 3.5-inch Drive, Standalone Tower

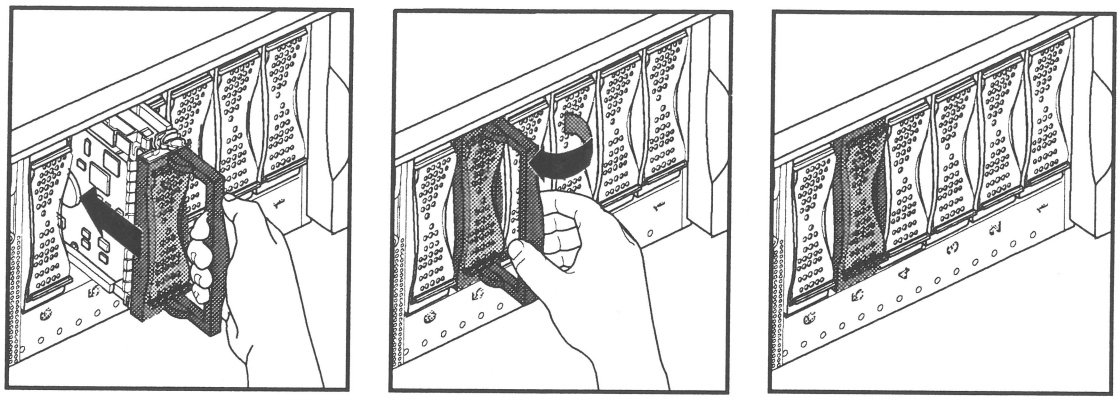

Figure 4-20 Inserting a 3.5-inch Drive, Rackmountable Enclosure

6. To avoid drives becoming mixed up if they are removed later from their bays, label each drive SCSI 1, SCSI 2, and so on through SCSI 6 (or 9 through 14, if you have jumpered the pins on the 3.5-inch drive backplane to give the drives the higher number set, as explained in "Jumpering the 3.5-Inch SCSI Device ID Range," earlier in this chapter).
7. Remove the grounding strap.

4.7 Installing 5.25-Inch Options

Optional 5.25-inch drives are housed in a peripheral carrier, which accommodates one full-height drive (such as a DLT tape drive) or two half-height drives (such as a CD-ROM drive and a DAT tape drive).

Peripherals ordered from Silicon Graphics are preconfigured; you can install them in the 5.25-inch peripheral carrier with no additional configuration. If you are installing third-party peripherals, or wish to change the configuration of a Silicon Graphics-supplied drive, follow these guidelines:

- Set the SCSI device ID between 1 and 15. Do not use SCSI ID 0, which is reserved for the controller. Note that the 5.25-inch drive bay and the 3.5-inch drives are on separate SCSI buses in the Origin Vault.
- Set the drive (motor) start jumper to start on command from the host. Do not configure the drive to start as soon as power is applied, since this setting may draw too much current when the system is first turned on. Options from Silicon Graphics have this jumper set correctly.

The installation process consists of these steps:

- Section 4.7.1
- Section 4.7.2

These procedures require a #2 Phillips screwdriver.

4.7.1 Preparing the Peripheral Carrier

To prepare the peripheral carrier for the peripheral(s), follow these steps:

1. To remove the peripheral carrier, use a #2 Phillips screwdriver to unscrew the two screws that secure the peripheral carrier to the Origin Vault chassis, as shown in Figure 4-21. Reserve the screws.
2. Grasp the handle of the peripheral carrier; the handle slides out about an inch. Pull the carrier out of the bay, supporting it with your other hand. See Figure 4-21.

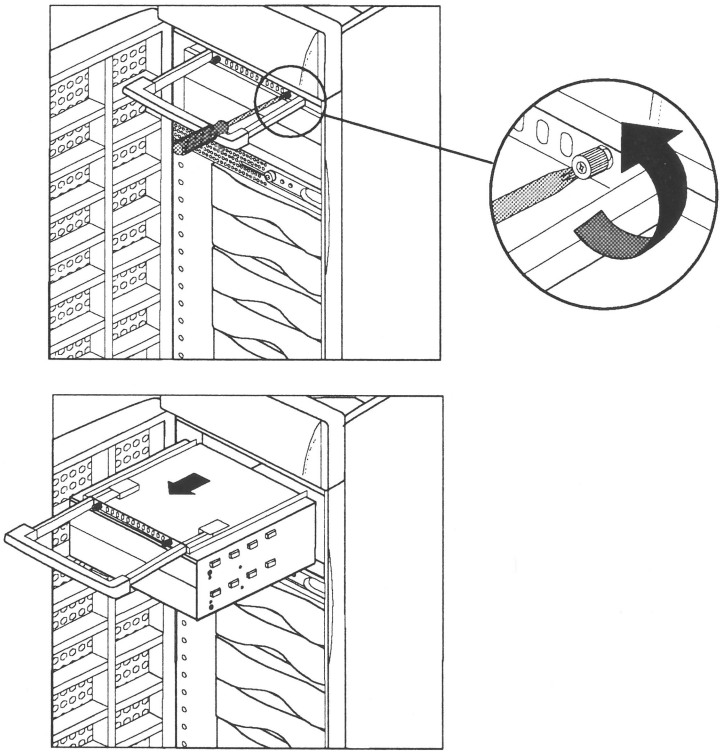

Figure 4-21 Unscrewing the Peripheral Carrier

3. Place the peripheral carrier on a work surface. Remove the EMI shielding plate from the rear of the peripheral carrier:
   - Unscrew the screw at the bottom of the EMI shielding plate on either side of the carrier, as shown in Figure 4-22.

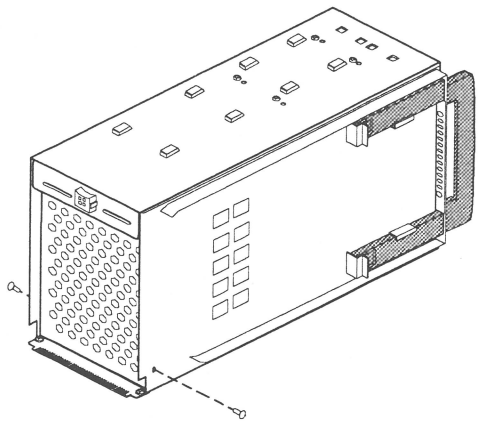

Figure 4-22 Removing Peripheral Carrier EMI Shielding Plate

- Pull the shielding plate out from the bottom and then down. This plate has tabs that hook into slots at the top of the carrier.

4. At the front of the peripheral carrier, use a fingernail to pull out one or both blanking plates:

   - For a full-height drive or two half-height drives, remove both.
   - For one half-height drive, remove either the upper or lower blanking plate.

   For ease of access during this installation process, you may wish to remove both plates, even if you are installing only one drive; you can reinstall the blanking plate for the empty side at the end of the process.

   The blanking plates snap into and out of place with tabs at the top and bottom. See Figure 4-23.

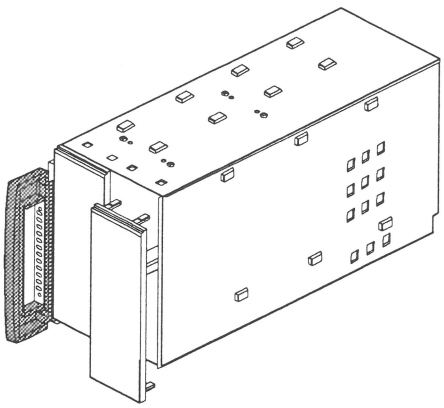

Figure 4-23 Removing a Peripheral Carrier Blanking Plate

Note: Save the blanking plate(s) you remove. If you remove a peripheral and do not replace it with another one, you should reinstall the blanking plate(s) to ensure proper cooling in the Origin Vault chassis.

4.7.2 Installing the Drive(s) and the Peripheral Carrier

To install drives in the peripheral carrier and insert the carrier into the Origin Vault, follow these steps:

1. If you are installing two half-height peripherals, check the orientation of their SCSI connectors. Note the configuration of the SCSI cable in the peripheral carrier.
2. Slide the peripheral(s) into the carrier from the front.

   If you are installing one half-height peripheral only, align it flush with one side or the other of the carrier. At least two screw holes on the top of the carrier and two on the bottom must align with screw holes on the peripheral so that it can be secured in the carrier.
3. Attach a connector of the power cable to each peripheral; Figure 4-24 shows an example.

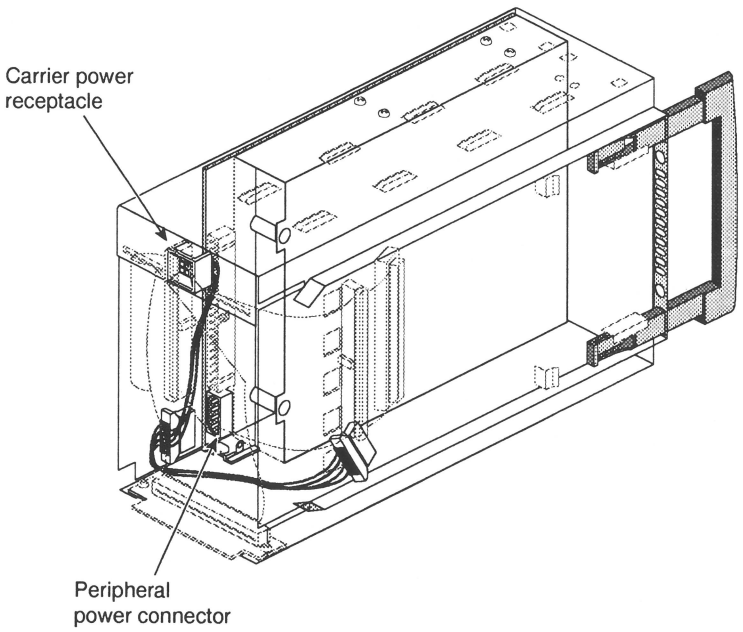

Figure 4-24 Attaching a Power Cable Connector to a Peripheral Inside the Carrier (Example)

4. Attach one of the SCSI connectors on the carrier's internal SCSI cable to each peripheral; Figure 4-25 shows an example. If you are inserting only one peripheral, use either connector. Fold the excess cable lengths as appropriate.

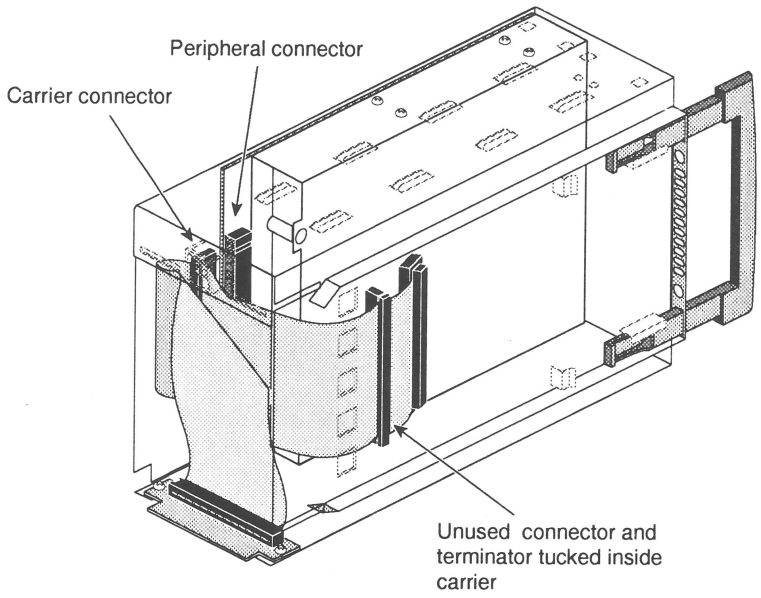

Figure 4-25 Attaching a SCSI Connector to a Peripheral Inside the Carrier (Example)

If you are installing a DLT tape drive, use the SCSI connector in the middle of the cable, rather than the one near the end.

5. Push the peripheral all the way into the carrier so that the front is flush with the front of the carrier. Secure the peripheral(s) in the carrier with two screws on the top and two screws on the bottom of the carrier, as shown in Figure 4-26.

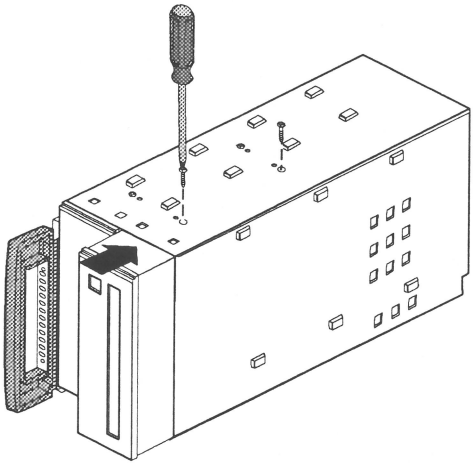

Figure 4-26 Securing a Peripheral in the Carrier

If all four screw holes align with holes in the peripheral, insert screws in the holes closest to the edge of the carrier.

6. Reattach the EMI shielding plate. If you have removed both blanking plates but installed only one half-height peripheral, reinstall the extra blanking plate.
7. Slide the carrier into the bay; note the orientation shown in Figure 4-27.

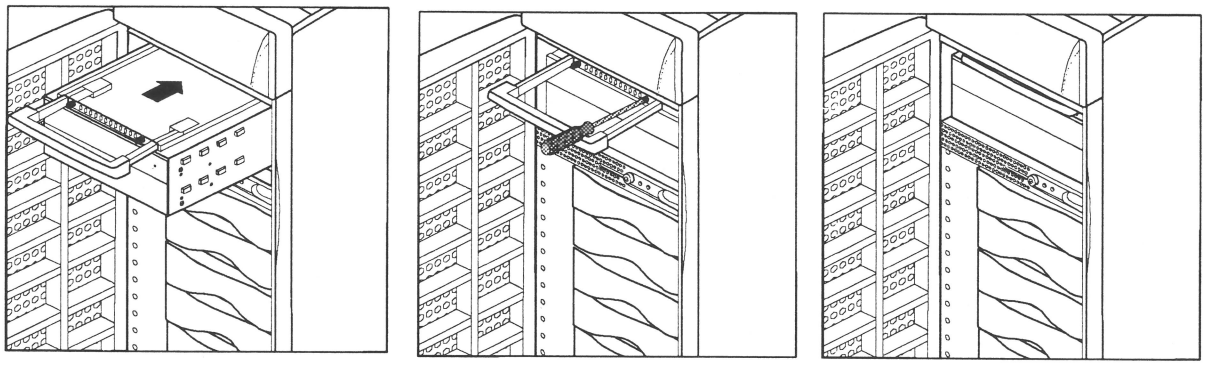

Figure 4-27 Inserting the Peripheral Carrier Into the 5.25-Inch Bay

Make sure the peripheral carrier is flush with the front of the Origin Vault. The connectors on the rear of the peripheral carrier mate with connectors on the 5.25-inch backplane.

8. Screw the peripheral carrier in using the screws you reserved when you removed the carrier (see step 1 in "Preparing the Peripheral Carrier," earlier in this chapter).

4.8 Cabling the Tower

To cable the standalone tower, follow these steps:

1. Locate the power cable and SCSI cable(s) included with your Origin Vault tower.
2. Locate the SCSI connectors on the tower; see Figure 4-28.

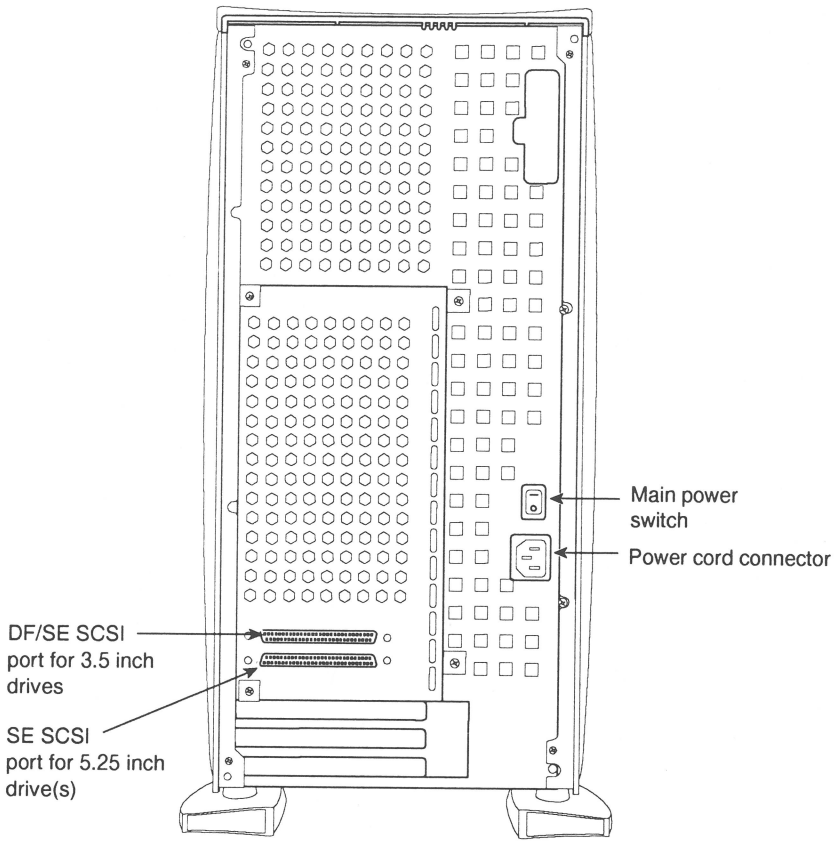

Figure 4-28 Origin Vault Standalone Tower Rear View

Caution: Make sure the SCSI driver on the host system matches the type (single-ended/differential) of expansion option that was ordered.

- If you connect a differential SCSI cable to a single-ended expansion option, the entire differential bus shuts down.
- If you connect a single-ended SCSI cable to a differential expansion option, none of the drives in the Origin Vault work.

By default, the Origin2000 host system SCSI connector is single-ended. All Ultra SCSI board channels are differential; channel 0 can be differential or single-ended.

3. Cable the SCSI connection:

   - Single-ended tower: Plug one of the 1-meter SCSI cable into the Origin Vault's 3.5-inch controller port. Attach the other end of this cable to a single-ended SCSI connector in the host, such as channel 0 on the Ultra SCSI XIO board or PCI option PCI-SCSI-Q-SE-1P.

     If peripherals are present in the 5.25-inch drive bay, use the other 1-meter cable to connect this controller port to a single-ended SCSI port in the host. (You can also use the optional 2-meter cable, marketing code X-S-2M.)

   - Differential tower: Use the Origin Vault's 10-meter SCSI cable to connect the 3.5-inch controller port to a differential SCSI port on the host.

   Figure 4-29 shows an Origin Vault tower cabled to an Origin2000 host system.

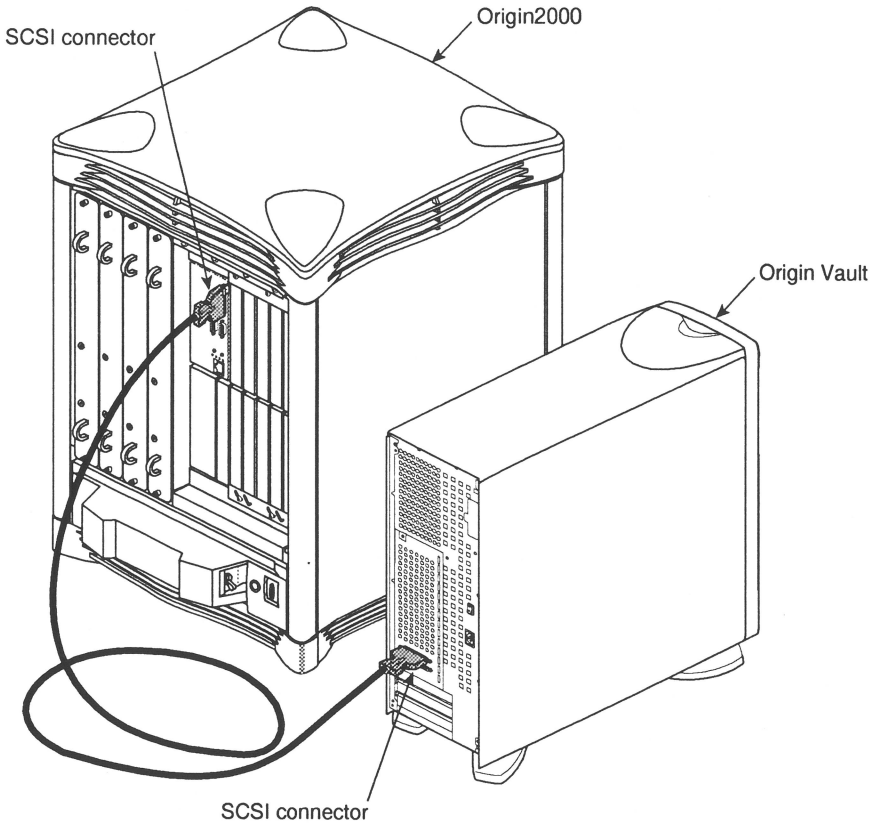

Figure 4-29 Origin Vault and Origin2000 Host

Figure 4-30 shows the SCSI cabling between an Origin Vault tower and an Origin200 host system.

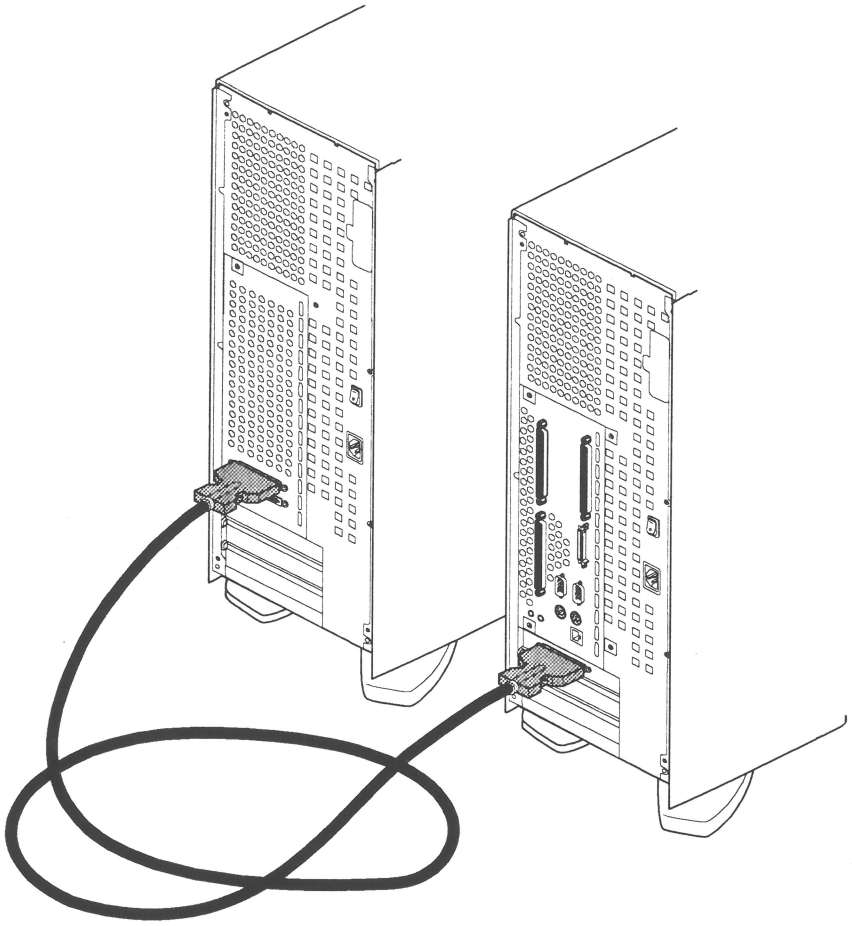

Figure 4-30 Origin Vault and Origin200 Host

Caution: When the standalone tower is connected to an Origin200 system, both systems must be plugged into the same grounded power circuit; otherwise, damage can result to components on the Origin200 system main system board.

4. Connect the power cable to the tower's power connector (see Figure 4-28) and plug the other end into a properly rated and grounded outlet. Do not turn on the Origin Vault system power at this time.

4.9 Turning On the Origin Vault Expansion Option

Follow these steps to turn on the Origin Vault expansion option:

Caution: For Origin Vault options that are part of a failsafe system, follow the bringup instructions for that system.

1. Make sure that the host system to which the Origin Vault is connected is powered off.
2. At the rear of the tower or chassis, turn on the master power switch, as shown in Figure 4-31.

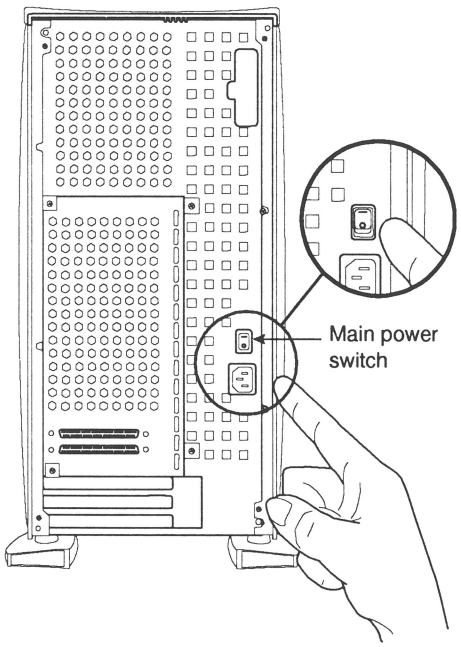

Figure 4-31 Master Power Switch

3. At the front of the tower or chassis, press the power button next to the 5.25-inch drive bay. The LED next to the button lights.

Note: When the master power switch is on, a small amount of power flows to the expansion option even if the power button has not been pressed on (its LED is dark).

4.10 Verifying Drive Installation

Use the following checklist to determine if a drive is installed correctly in the Origin Vault tower or rackmounted enclosure:

- When you power on the system, watch the drive LEDs. The LEDs should blink one after the other as they are accessed: first the 3.5-inch drives (sequentially), and then the 5.25-inch drives.
- Check the system console; drives that are malfunctioning generate an error message on the system console as the system boots.
- When the system boots in either single-user mode, or multiuser mode, use *hinv* to see what is available. The drives should be listed; for example:

```
FPU: MIPS R10010 Floating Point Chip Revision: 0.0
CPU: MIPS R10000 Processor Chip Revision: 2.6
2 190 MHZ IP27 Processors
```

```
Main memory size: 64 Mbytes
Instruction cache size: 32 Kbytes
Data cache size: 32 Kbytes
Secondary unified instruction/data cache size: 1 Mbyte
Integral SCSI controller 0: Version QL1040B
  Disk drive: unit 1 on SCSI controller 0
  Disk drive: unit 2 on SCSI controller 0
  Disk drive: unit 3 on SCSI controller 0
  Disk drive: unit 4 on SCSI controller 0
  Disk drive: unit 5 on SCSI controller 0
Integral SCSI controller 1: Version QL1040B
Integral SCSI controller 7: Version QL1040B
  Disk drive: unit 1 on SCSI controller 7
  Disk drive: unit 2 on SCSI controller 7
  Disk drive: unit 3 on SCSI controller 7
  Disk drive: unit 4 on SCSI controller 7
  Disk drive: unit 5 on SCSI controller 7
  Disk drive: unit 6 on SCSI controller 7
  Disk drive: unit 7 on SCSI controller 7
  Disk drive: unit 8 on SCSI controller 7
  Disk drive: unit 9 on SCSI controller 7
  Disk drive: unit 10 on SCSI controller 7
  Disk drive: unit 11 on SCSI controller 7
  Disk drive: unit 12 on SCSI controller 7
  Disk drive: unit 13 on SCSI controller 7
  Disk drive: unit 14 on SCSI controller 7
  Disk drive: unit 15 on SCSI controller 7
Integral SCSI controller 8: Version QL1040B
Integral SCSI controller 9: Version QL1040B
Integral SCSI controller 10: Version QL1040B
IOC3 serial port: tty1
IOC3 serial port: tty2
Integral Fast Ethernet: ef0, version 1
IOC3 external interrupts: 1
```

4.11 Configuring Drives

Silicon Graphics-provided peripherals are all recognized by the IRIX operating system and are ready to be configured for use with the system. For general reference on disks and filesystems, consult the latest edition of *IRIX Admin: Disks and Filesystems*. Table 4-1 indicates where to get more information about configuring drives, depending upon how you want to use the drives in your system.

Table 4-1 Information for Drive Configuration

Operation	Reference (Man) Pages or Commands
Creating device files	MAKEDEV(1M) mknod(1M)
Disks	
Formatting and initializing	fx(1M)

Table 4-1 (continued) Information for Drive Configuration

Operation	Reference (Man) Pages or Commands
Volume header files, adding and removing	dvhtool(1M)
Displaying partitions	prtvtoc(1M) fx(1M)
Repartitioning	fx(1M) *xdkm* graphical tool
System (boot) disk creation	PROM monitor (from the System Maintenance Menu) fx(1M), mkfs(1M), MAKEDEV(1M) dump(1M), xfsdump(1M)
Mounted filesystem, adding	Add_disk(1)
Use quotas	quota(1)
Filesystems	
Creating an EFS or XFS	mkfs(1M)
Spanning across multiple disks	xlv(7M)
Mounting and unmounting	mount(1M), umount(1M) fstab(4)
Automatically mounting (automount)	automount(1M) exportfs(4) chkconfig(1M)

Chapter 5

Installing an Origin200 System in a Rack

This chapter describes how to install an Origin200 server in a standard (non-Silicon Graphics) equipment rack. It includes information about:

- installing side rails in the equipment rack
- attaching rack-mounting hardware (ears) to the Origin200 chassis
- lifting the Origin200 chassis into the rack and securing it

For complete instructions about configuring an Origin200 system, including adding drives, attaching cables, turning on the system, and logging in, see Chapter 3, "Setting Up an Origin200 System."

This chapter also describes how to remove an Origin200 system from an equipment rack.



Warning: **When installing a two-module system, or a attaching an Origin Vault expansion box, all chassis must be connected to the same, grounded power circuit. If the chassis are not all connected to the same power supply, resulting differences in ground potential (current) can damage components on the Origin200 main system board.**

5.1 Overview

Origin200 systems that are configured for rack-mounting are shipped from Silicon Graphics with these components:

- side rails to support the weight of the system
- mounting ears and screws to attach them to the Origin200 chassis
- decorative end-caps to cover the mounting ears

You will also need the following fasteners (which should be provided from the manufacturer of the equipment rack, or a third-party):

- fasteners to attach the side rails to the rack
- screws to secure the Origin200 chassis to the rack via the mounting ears.

The equipment rack should provide access to the rear of the server. The rear of the server is where the main power switch is located, as well as all of the connectors (power,

networking, serial ports, diagnostic port, parallel port, and CrayLink Interconnect port). Connectors for any PCI options are also at the rear of the server.

See Chapter 1, "Origin200: Overview and Theory of Operations" for a general description of both tower and rack-mountable installation methods and converting between them.

Caution: If you are installing a two-module Origin200 server, be extremely careful with the CrayLink Interconnect cable. Do not allow it to become kinked or bent excessively inside the rack. Be careful not to catch and smash it between the system and other parts of the equipment rack when sliding the Origin200 chassis in and out.

5.2 Installing the Mounting Hardware on the Chassis

Each rack-mountable Origin200 ships with two mounting ears and screws to attach the ears to the server. These ears provide a mechanism to secure the server in the rack and prevent it from sliding out. The ears do not bear any of the server's weight.

Follow these steps to install the mounting ears on the chassis:

1. Place the Origin200 on a flat, sturdy work surface capable of supporting at least 40 pounds (18 kg) and up to 75 pounds (34 kg).
   - Do not install any option drives in the system yet. Drives make the chassis heavier and more difficult to lift and move.
   - The system should be flat on the work surface, as shown in Figure 5-1.

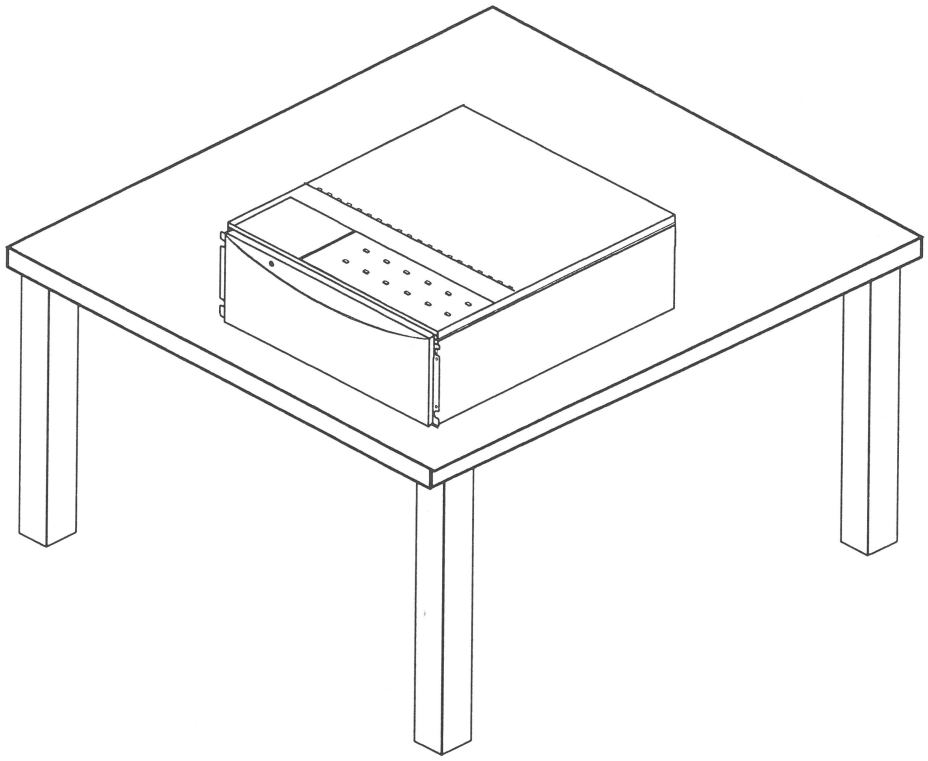

Figure 5-1 Placing the Origin200 on a Work Surface

2. Attach the ears.

   - There are two ears, one for the left side and one for the right side. These are stamped "L" and "R" and are not interchangeable. See Figure 5-2.

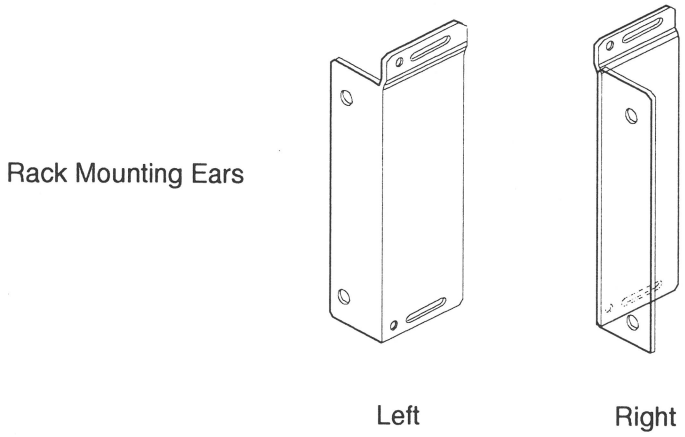

Figure 5-2 Origin200 Rack Mounting Ears

   - Using a #2 Phillips screwdriver and the screws provided with the Origin200, fasten each ear to the side of the chassis, behind the front flange, as shown in Figure 5-3. Use two screws for each mounting ear.

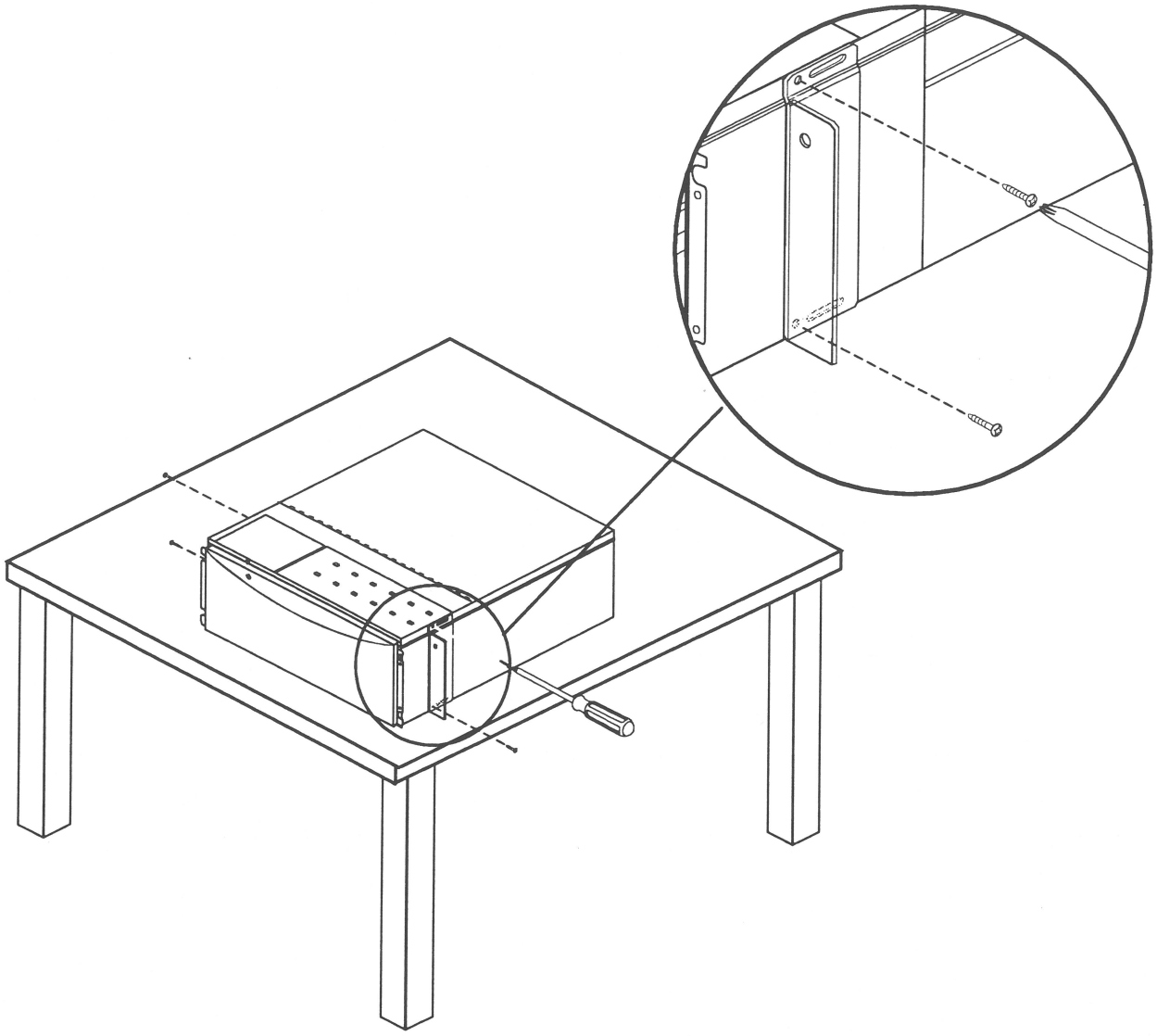

Figure 5-3 Attaching the Rack Mounting Hardware (Ears)

If you wish to install internal options, such as additional memory and PCI cards, you should do so now.

- For instructions about opening the system, see "Removing and Replacing the System Cover and Chassis Access Panel" in Chapter 6.
- For information on installing memory, see Chapter 7, "Installing and Removing Memory."
- For information on installing PCI options, see Chapter 8, "Installing and Removing PCI Option Boards."

You are finished attaching the mounting ears. Proceed to the next section to install the server in the equipment rack.

5.3 Installing a Chassis In the Rack

Note: Use two people to lift an Origin200 system.

Follow these steps to install the Origin200 chassis in an equipment rack.

1. *Recommended*: Lock the front door with the key. This prevents the door from being pulled open accidentally while you install the server.
2. Install mounting rails or a shelf in the equipment rack.
   - The rackmountable Origin200 server ships with adjustable rails that can fit racks of various depths.
   - If you use a different mounting system, such as a shelf, make sure it can support at least 75 pounds (34 kg).
3. With a person on each side of the chassis, lift the server and move it to the equipment rack, as shown in Figure 5-4.

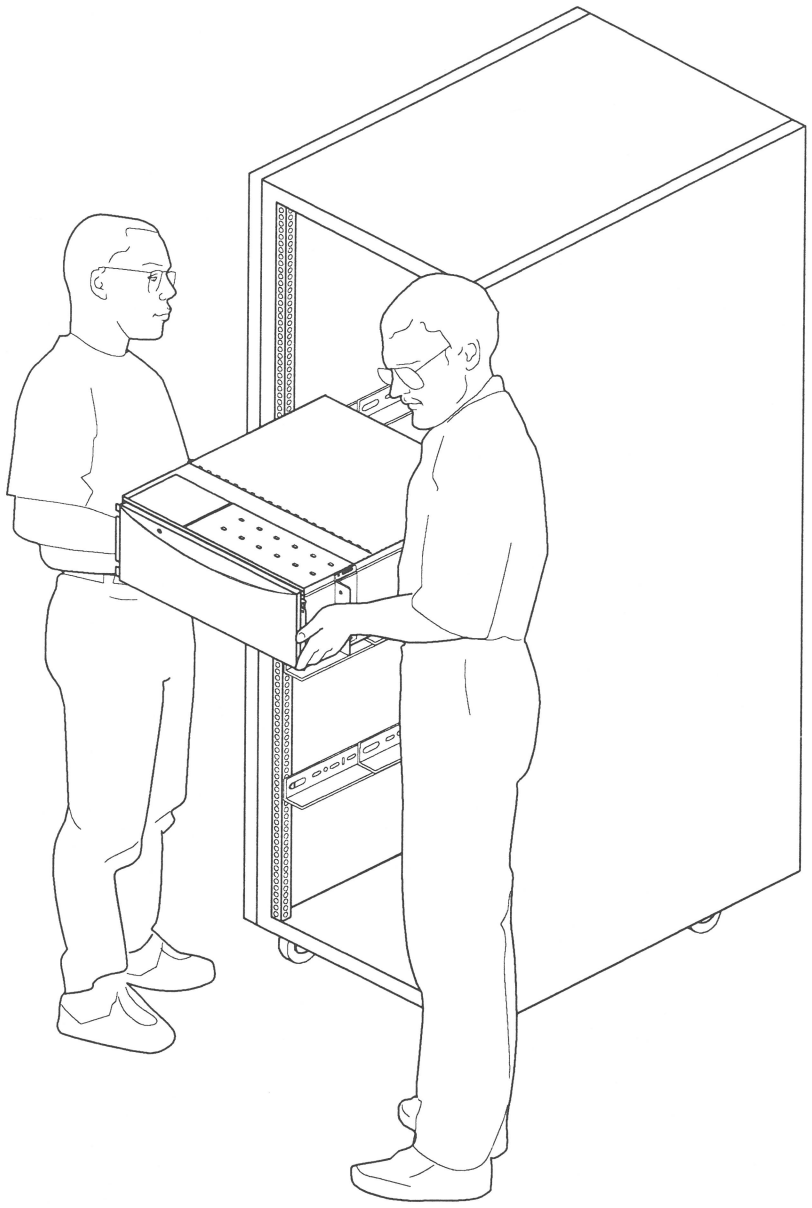

Figure 5-4 Lifting the Origin200 Server Into a Rack

4. Place the server in the rack on top of the side rails, then slide it back into the rack.
5. Secure the server to the rack from the front, using the appropriate fasteners for your equipment rack.
6. Attach the plastic end caps to the front of the server to conceal the mounting flange, as shown in Figure 5-5.

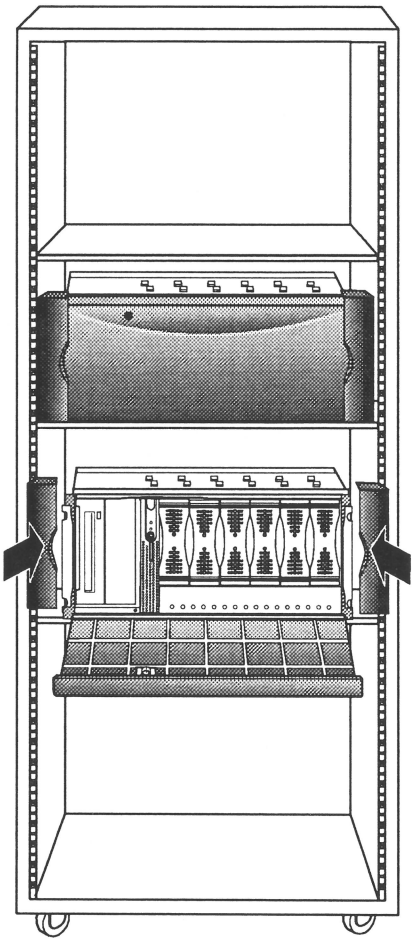

Figure 5-5 Attaching the Plastic End Caps to a Rack Mounted Server

You are finished installing the server in a rack.

- If you have additional drives, you can install them in the system.
- If you are installing the server for the first time, turn to Chapter 3, "Setting Up an Origin200 System" for information about attaching cables, the system console, and starting the server for the first time.

5.4 Removing a Server From an Equipment Rack

If you have a two-module Origin200 system, be extremely careful with the CrayLink Interconnect cable. Do not bend or yank on it while removing the server from the equipment rack.

Follow these instructions to remove an Origin200 system from an equipment rack:

1. *Optional*: Depending upon how far out of the rack you plan to pull the server, the length of your cables, and what you are planning on doing to the server, you may wish to unplug the cables attached to the rear of the system before you begin removing the chassis.
2. *Recommended*: Lock the front door with the key. This prevents the door from being pulled open accidentally while you are installing the server.
3. *Recommended*: Remove all drives from the system to make the chassis lighter and easier to carry.
4. Remove the plastic end caps.
5. Remove the screws that secure the mounting ears to the rack.
6. With two people, slide the server out of the rack, as shown in Figure 5-6.

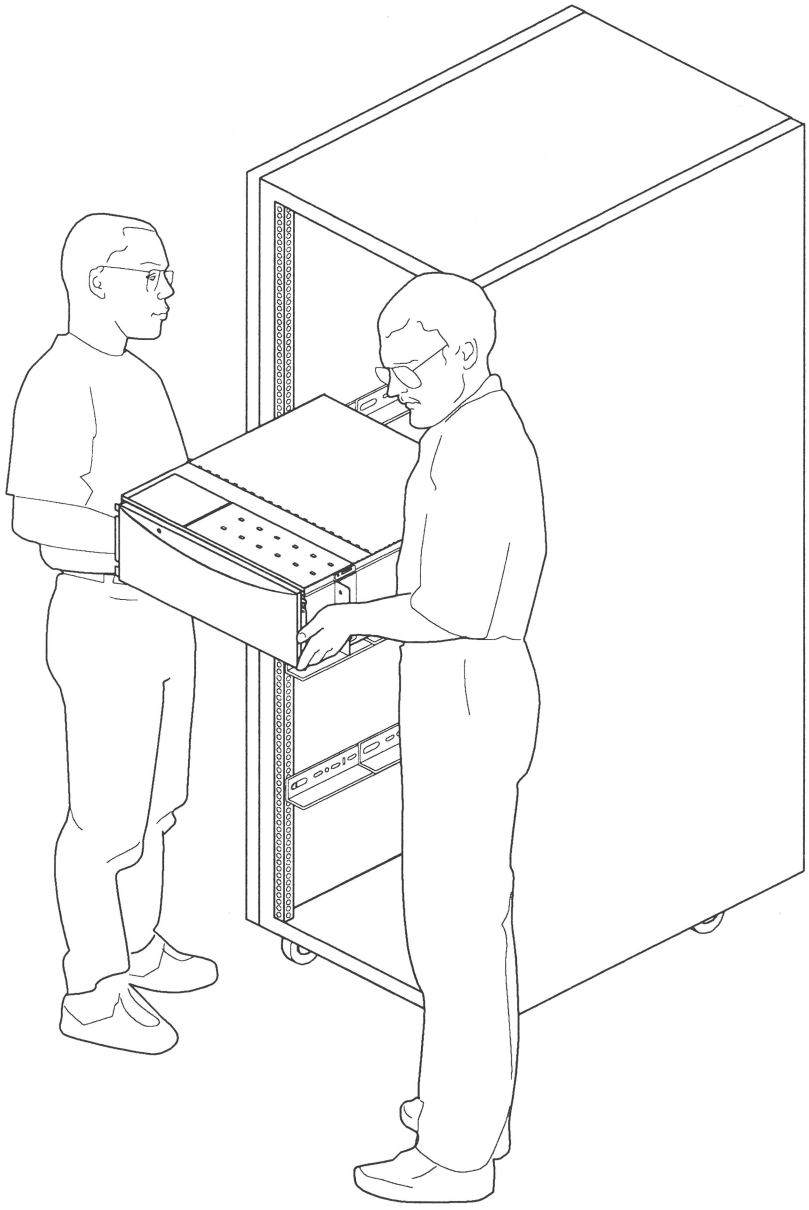

Figure 5-6 Removing An Origin200 From a Rack

7. If you are servicing the Origin200, place it on a flat, sturdy work surface capable of supporting at least 40 pounds (18 kg).
   - The system should be flat on the work surface, as shown in Figure 5-7.

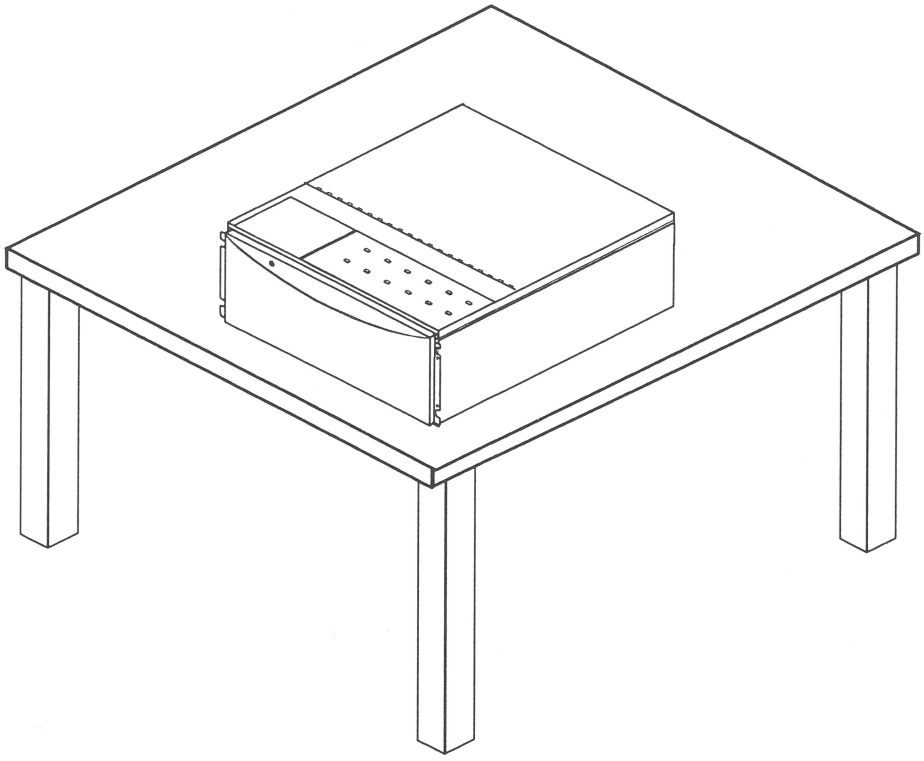

Figure 5-7 Placing the Origin200 on a Work Surface

You are finished removing the server from a rack.

Chapter 6

Origin200 Server Operations

This chapter describes various features of Origin200 and how to use them. It contains the following sections:

- Section 6.1, "Front Panel Functions: Status LED, Power, Reset, NMI"
- Section 6.2, "Turning the System On and Off"
- Section 6.3, "Accessing the Server Over the Web"
- Section 6.4, "Using Another Computer or Workstation as the System Console"
- Section 6.5, "Using the AUX Port and Module System Controller Commands"
- Section 6.6, "Determining What Devices are Installed On the Server"
- Section 6.7, "Removing and Replacing the System Cover and Chassis Access Panel"
- Section 6.8, "Locking the System"
- Section 6.9, "Adjusting the Feet"

6.1 Front Panel Functions: Status LED, Power, Reset, NMI

The front panel provides the following features:

- status LED
- front power switch
- reset button
- nonmaskable interrupt (NMI) button

Figure 6-1 shows the locations of these features.

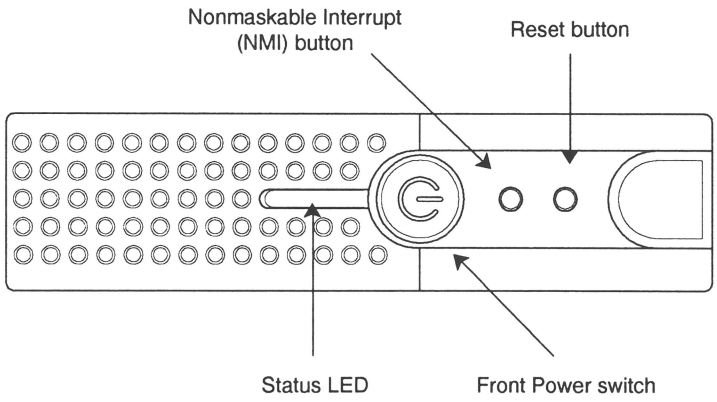

Figure 6-1 The Origin200 Front Panel

6.1.1 Status LED

The actual status LED is part of the system controller assembly, which is located behind the front panel. A piece of light-conductive plastic (light pipe) channels the light from the LED to the front panel.

When the master power switch is turned on, the status LED flashes green briefly, but does not stay illuminated. When the system boots, flashes red momentarily, then turns green.

For a complete list of status LED codes, see "Status LED Messages" in Chapter 10.

6.1.2 Front Power Switch

The front power switch causes the module system controller to either turn on or turn off power to the system. The master power switch at the rear of the system must be on in order for the front power switch to work.

When you press the switch to turn the system on, the module system controller signals the power supply to shut off power to the drive bays, PCI backplane, and main system board and CPU daughter card.

The module system controller itself remains active until the master power switch is turned off.

6.1.3 Using the Reset Button

Use the reset button if the system is completely unresponsive (you cannot type commands to it) and you want to reboot the server without shutting it off. The reset button skips the automatic power-on diagnostic tests.

To reset the system, press the reset button. (See Figure 6-1). After you press the reset button, the system status LED on the front panel turns red briefly, then green and the system reboots.

6.1.4 Using the Nonmaskable Interrupt (NMI) Button

The nonmaskable interrupt is similar to reset, except that the system's current state is saved. When you press the nonmaskable interrupt button, this is referred to as "generating a nonmaskable interrupt" or "NMI."

Generating an NMI is can be useful when attempting to solve application and system problems that cause the system to halt. An NMI on the Origin200 server has roughly the same effect as on other machines in the Origin family.

To generate a NMI, press the NMI button. (See Figure 6-1). What happens when you generate an NMI depends upon the state of the system at the time:

- If the system was running in PROM mode, the CPU immediately enters power-on diagnostics (POD) mode.
- If a kernel debugging facility (such as *symmon*) is available, the system may start that utility.
- If the kernel debugging facility fails due to data corruption, you can generate a second NMI and force the system into POD mode.

You can also generate an NMI using a module system controller command. See "Using the AUX Port and Module System Controller Commands."

Occasionally, a system may not respond to an NMI. If the happens, you can either press the reset button, or turn the machine off and on again.

6.2 Turning the System On and Off

This section describes the functions of the two power switches and how to turn the system on and off.

6.2.1 About the Master Power Switch and Front Power Switch

The Origin200 server has two power switches: the *master power switch* and the *front power switch*.

The master power switch is located at the rear of the system. This switch controls whether or not current flows into the power supply.

- When the master power switch is on, the power supply sends power (5VDC) to the system controller at all times. Because of this, you should turn the master power switch off before servicing the Origin200, even if the system appears to be off otherwise.

- When the master power switch is off, no current flows to the power supply and the system is completely off.

The front power switch is located on the front panel, between the 3.5-inch and 5.25-inch drive bays.

- When you press the switch to turn the system on, the module system controller signals the power supply to send power to the other components of the server, thus causing the system to boot.
- When you press the switch to turn the system off, the module system controller signals the power supply to immediately shut off current to the various parts of the system (disk drives, CPU, PCI boards, and so forth). The system controller remains active until the master power switch is turned off.

6.2.2 Turning On the System

Follow these steps to turn on the system:

1. At the rear of the system, turn the master power switch on, as shown in Figure 6-2.

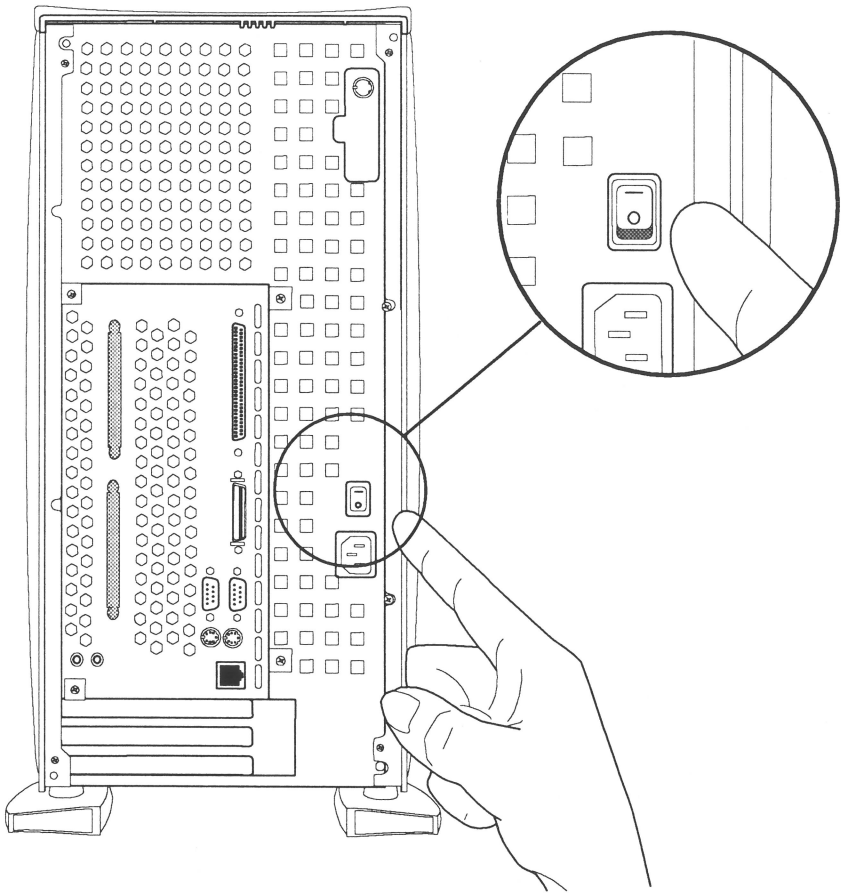

Figure 6-2 Turning On the Master Power Switch

- If you have a two-node system, turn on the master power switches for both nodes. It does not matter which you turn on first.
- When you turn on the master power switch, the status LED at the front of the system flashes green momentarily.

2. At the front of the system, press the power button, as shown in Figure 6-3.

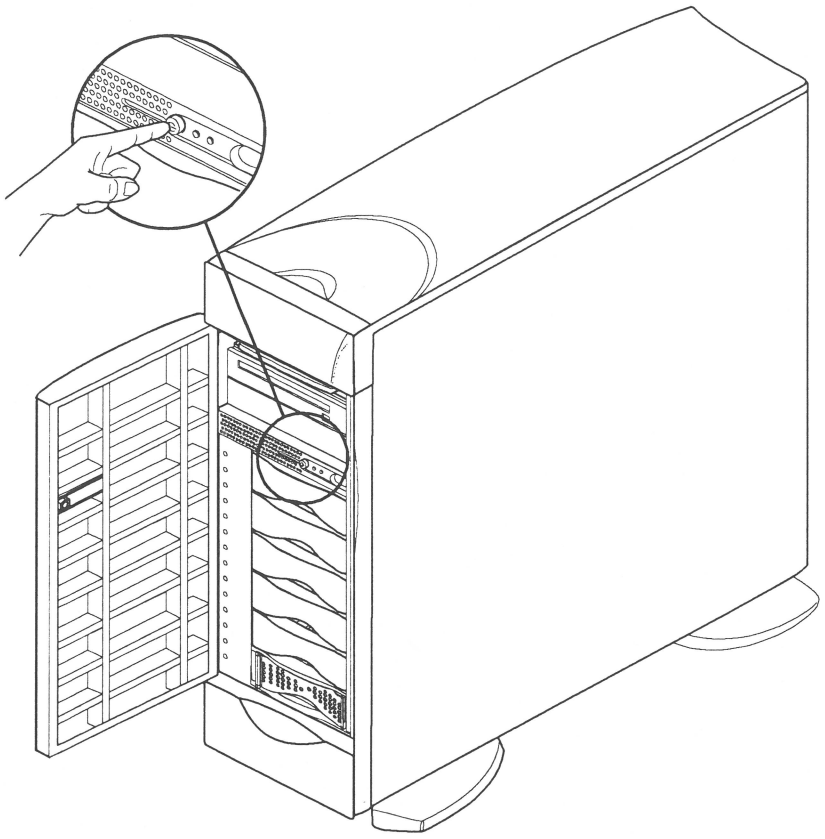

Figure 6-3 Turning On the Front Power Switch

- In a two-node system, press the front power switch on the master node. (The front power switch on the slave node is inactive.)
- Press the button far enough to feel a slight "click."
- After you press the button, the status LED turns red, then green as the system boots.
- As the system boots, power is applied to the 3.5-inch peripherals in order, starting with the drive in slot 1 (the system disk) and proceeding to slot 6. After the 3.5-inch peripherals, power is applied to the 5.25-inch peripherals.

3. You see several screens of diagnostic messages as the system performs various self-tests.

   Be aware that the more memory that is installed in the system, the longer the tests may take. For example, a system with 512 MB of memory may take over 2 minutes to complete it's diagnostics.

When the diagnostics finish, you see the System Maintenance Menu:

```
Running power-on diagnostics...
System Maintenance Menu
1) Start System
2) Install Software
3) Run Diagnostics
4) Recover System
5) Enter Command Monitor

   Option?
```

4. At the System Maintenance Menu, type `1` and press `<Enter>`.
   - The Origin200 server starts booting IRIX.
   - You should see various messages, followed by the login prompt:
   - IRIS login:
   - When you see the "login" prompt, the system is finished booting and it is ready to us.

6.2.3 Turning Off the System

When you turn off the system, you can either

- turn the system off, but leave the system controller active (for example, if you want to turn the system on remotely through the AUX port)
- turn off all power to the system (for example, if you are servicing internal components, replacing drives, or moving the system))

Follow these steps to turn off the system:

1. Log in to the system as *root*.
2. Verify that noone is using the system, or that it is in the middle of a critical task.
3. At a shell prompt, enter this command:

   ```
   /etc/shutdown -g0
   ```

   This causes the system to begin shutting down immediately. See shutdown(1M) for more information.

   You see various messages about the system shutting down, then you see the System Maintenance Menu:

   ```
   Running power-on diagnostics...
   System Maintenance Menu
   1) Start System
   2) Install Software
   3) Run Diagnostics
   4) Recover System
   5) Enter Command Monitor

      Option?
   ```

4. Once you see the System Maintenance Menu, locate the power button at the front of the chassis (the master chassis in a two-module system) and press it once. See Figure 6-4

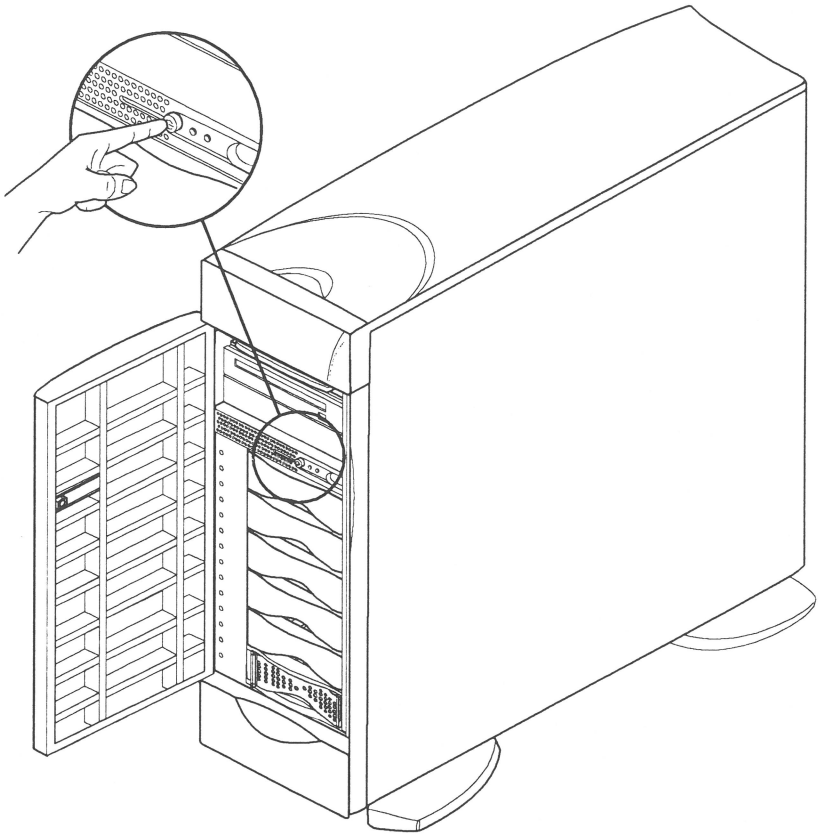

Figure 6-4 Turning Off the Front Power Switch

- The status LED on the front of the system blinks, then goes out when the system is powered off.
- If you are going to move the system, wait a few more seconds to allow the internal disks to stop spinning.
- If you wish to leave the system controller active (so that you can turn the system on remotely through the AUX port), do not continue to the next step (turning off the master power switch).

5. If you wish to turn off all power to the system (for example, to service the machine), turn off the master power switch at the rear of the server, as shown in Figure 6-5.

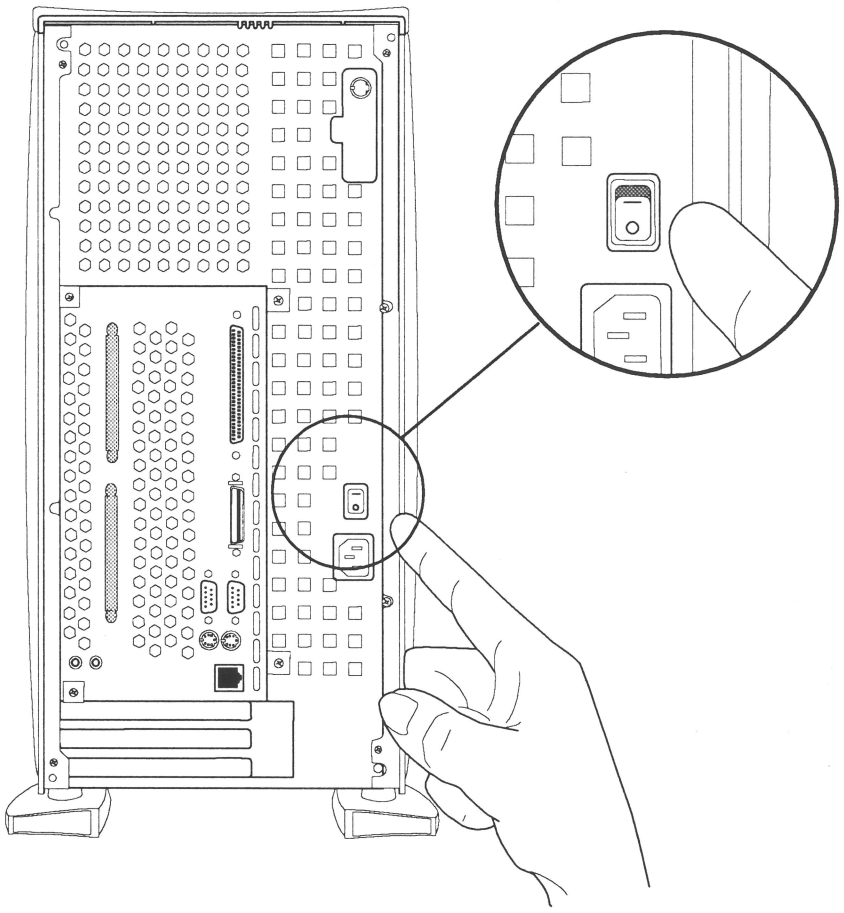

Figure 6-5 Turning Off the Master Power Switch

Note: Once you turn off the master power switch, the system controller is no longer active and you cannot boot the system remotely through the AUX port.

6.3 Accessing the Server Over the Web

The Origin200 server is bundled with World-Wide Web server software that allows you to access the system with a browser from any other computer on your network. In order to do this, the Origin200 server

- must be attached to the network; see "Putting the Pieces Together" in Chapter 3
- must be configured to access the network

Once the server is attached to the network and properly configured, follow these steps to access it with a Web browser:

1. Start the Web browser on a computer attached to the network.
2. Open the *URL* that corresponds to your server's name and domain, using port 2077.

- For example, if the server is named "atlas," and the domain is "donut.com," you would open the following URL:

  ```
  http://atlas.donut.com:2077/
  ```

- You can use this URL to administer various aspects of your server that relate to networking and file (ftp, World-Wide Web) access.

The server is also shipped with a default system home (Web) page. Using the above example of a server called "atlas" in the domain "donut.com," you could access this page with the following URL:

```
http://atlas.donut.com/
```

The HTML source for this page is stored in the directory */var/www/htdocs/index.html*.

6.4 Using Another Computer or Workstation as the System Console

As an alternative to a character-based (ASCII) terminal, you can use another computer (such as a laptop, IBM-compatible computer, or Macintosh computer) or UNIX-based workstation as the system console. The following sections provide basic information.

6.4.1 Using An IBM-Compatible Or Macintosh Computer As the System Console

To use an IBM-compatible or Macintosh computer as the system console, you need the following:

- a serial adapter cable with proper connectors and wiring to connect your computer with the Origin200 server
- a *terminal emulation* program (such as Term, HyperTerm, TERMINAL.EXE, Bitcom, Procomm, ZTerm, SITcomm, or Macterm)

The basic steps to using a computer as a system console for your Origin200 server are:

- Connect a serial port of the computer to serial port 1 of the Origin200 server.
- Start your *terminal emulator* software and log in to the Origin200 server.

The next sections describe this process.

6.4.1.1 Obtaining and Connecting the Correct Serial Adapter Cable

Silicon Graphics has adapter cables that you can attach to the serial cable provided with the Origin200 server. Using these adapter cables and the serial cable provided, you can connect your computer to the Origin200 server. Table 6-1 lists the adapter cables and part numbers.

Table 6-1 Serial Adapter Cables for Connecting IBM-Compatible and Macintosh Computers To An Origin200 Server

Computer Type	Description	Length	Silicon Graphics Part Number
IBM-Compatible	DB-25 Female to DB-9 Female	6 feet (2 meters)	9290134
Macintosh	DB-25 Female to DIN-8 Male	6 feet (2 meters)	9290135

The wiring for these cables is described in Appendix B, "Cable Descriptions."

Once you have obtained the correct adapter cable, follow these steps to connect the computer and the Origin200 server:

1. Make sure the Origin200 server is turned off.
2. Locate the serial cable that was shipped with your Origin200 server.
3. Attach the DB9 connector to serial port 1, as shown in Figure 6-6.

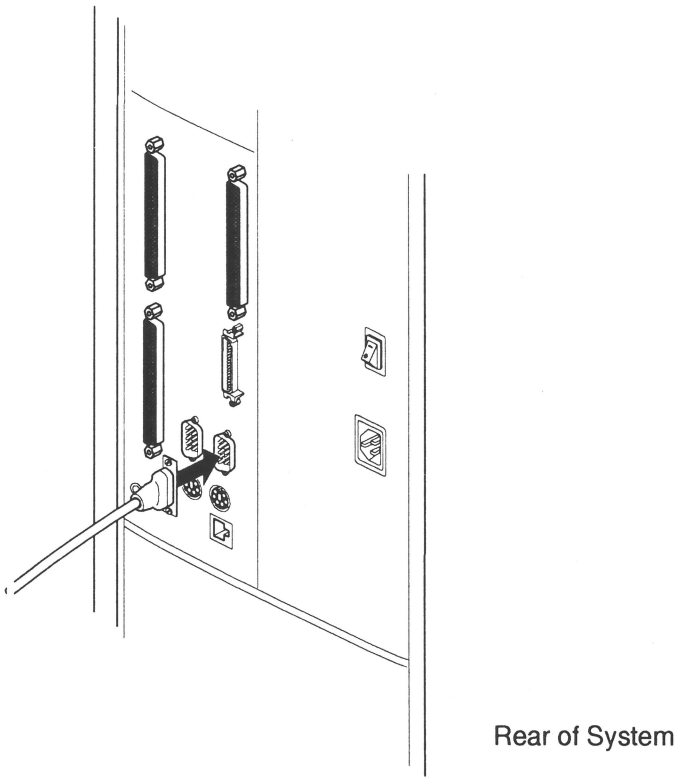

Figure 6-6 Attaching a Serial Cable To Port 1 of the Origin200 Server

4. Attach the DB-25 connector of the serial cable to the DB-25 connector of the adapter cable.
5. Attach the other end of the adapter cable to one of the serial ports on your computer.
   - You can use any available serial port on your IBM-compatible or Macintosh computer.
   - Make a note of which serial port you use. You may need this information later when you set up your terminal emulator.

6.4.1.2 Setting Up and Starting the Terminal Emulator

To communicate with the Origin200 server, you need a terminal emulator for your IBM compatible or Macintosh computer. Many operating systems, such as Microsoft® Windows, ship with a terminal emulator package (also known as modem or communications software.) Some examples of terminal emulator software include.

- Term
- HyperTerm
- TERMINAL.EXE
- Bitcom
- Procomm
- ZTerm
- SITcomm
- Macterm

Regardless of the type of terminal emulator you use, make sure it has the following settings:

Table 6-2 Terminal Emulator Settings

Setting	Value
Baud rate	9600
Data bits	8
Stop bits	1
Parity	None
Local echo	off
Terminal type	Any of the following: DEC V100, VT102, Wyse 60, ANSI, or dumb.
Flow Control	None or XON/XOFF

To configure your terminal emulator, follow these general steps:

1. Power on your IBM compatible or Macintosh computer.
2. When the system has booted, locate and start the terminal emulator.
3. Adjust the settings for your terminal emulator as indicated in Table 6-2.
   - Be sure the terminal emulator software is configured to use the serial port on your computer to which you attached the serial cable.
   - Note which terminal type (such as VT100 or ANSI) you choose to emulate. You will need this information when you log in to the Origin200 server.
   - Other settings, such as upload and download protocol, initialization strings, and file transfer settings do not matter for this procedure. You can leave them set to their defaults.

6.4.1.3 Logging In To the Server

Follow these steps to log in to the server using your computer as a system console:

1. Turn on the Origin200. (See "Turning On the System" on page 4.)
2. Press **<Enter>** once or twice on your computer. You should see a power-on diagnostics message, followed by a menu similar to the following:

```
Running power-on diagnostics...
System Maintenance Menu
1) Start System
2) Install Software
3) Run Diagnostics
4) Recover System
5) Enter Command Monitor

   Option?
```

   - If you do not see the System Maintenance Menu, and nothing happens when you press **<Enter>**, make sure the cables are correctly attached. The DB9 connector on the long serial cable (shipped with the Origin200 server) must be in port 1 of the server.
   - Make sure you have configured the terminal emulator to use the correct serial port on your computer.
   - Make sure the baud rate and other emulator settings are correct. See Table 6-2. If you see strange characters on your screen (such as xx``x`) when you press the return key, you may not have set the baud rate correctly
3. Type **1** and press **<Enter>**.
   - The Origin200 server starts booting IRIX.
   - You should see various messages, followed by the login prompt:

```
IRIS login:
```

4. At the "login:" prompt, enter **root**, **setup**, **guest**, or another account name and press **<Enter>**.
5. You see some brief messages and the following prompt:

```
TERM = (vt100)
```

6. Enter the appropriate terminal type for your emulator and press <Enter>. (See Table 6-2.) If you are using the vt100 terminal type, you can simply press <Enter>.

6.4.2 Using a A Silicon Graphics Workstation As the System Console

You can use another workstation, such as a Silicon Graphics O2™, Indy, Indigo²™, or Onyx2™ as the system console for the server. To do this connect the workstation and the Origin200 server together using a serial cable, then use terminal emulation software (such as *cu*) to log in to the Origin200 server.

The procedures in the following sections assume you are connecting the Origin200 server to a Silicon Graphics workstation. They describe how to

- obtain the correct serial cable
- make sure either the *eoe.swuucp* or *eoe2.sw.uucp* subsystem is installed on the workstation
- configure the workstation, which includes modifying some configuration files
- connect a serial cable between port **1** of the Origin200 server and another serial port on the workstation
- use the *cu* command on the workstation to connect to the Origin200 server and log in

6.4.2.1 Obtaining the Correct Serial Cable

If you are connecting the Origin200 to a Silicon Graphics workstation, you need one of three RS-232 serial cables:

- DB9 to DIN-8, *null modem* (has a D-shaped, nine-pin connector on one end and a small, round connector on the other end); use this cable to connect the Origin200 server to a Silicon Graphics Indy, Indigo², Indigo, Personal IRIS™ 4D/30, or Personal IRIS 4D/35 workstation
- DB9 to DB9, null modem (has a D-shaped, nine-pin connector on each end) with older cable wiring; use this cable to connect the Origin200 server to a Silicon Graphics Onyx, Personal IRIS, or POWER Series workstation.
- DB9 to DB9, null modem with IBM-compatible wiring; use this cable to connect the Origin200 server to a Silicon Graphics O2 or Onyx2 workstation.

Appropriate DB9 to DIN-8 and DB9 to DB9 cables are available from Silicon Graphics. The the pin-to-pin descriptions are provided in the sections Section B.1.3 and "Origin200 to O2, Onyx2, and IBM-Compatible (DB-9 to DB-9)" in Appendix B.

6.4.2.2 Checking for the Correct Software

The UUCP subsystem contains the program *cu* and several configuration files necessary for this procedure. To make sure the UUCP subsystem is installed on the workstation, enter the following command at a shell prompt:

```
versions | grep uucp
```

If the UUCP subsystem is installed, you will see a line similar to this:

```
I eoe.sw.uucp 02/20/96 UUCP Utilities
```

If you do not see the above line, the UUCP subsystem is not installed on the workstation. You should install or *eoe.sw.uucp* now.

Note: The UUCP software is required only on the workstation and not on the Origin200 server.

Once the UUCP subsystem is installed, continue with the next section, "Configuring the Workstation."

6.4.2.3 Configuring the Workstation

Follow these steps to configure the workstation:

1. Log in as root (or use *su* to invoke superuser privileges) on the workstation that you will connect to the Origin200 server.
2. Use a text editor (such as *vi*, *jot*, or *emacs*) to edit the file */etc/inittab*.
   - Find the line that corresponds to the serial port you wish to use on the workstation. For example, this line corresponds to port **2**:

     ```
     t2:23:off:/sbin/getty -N ttyd2 co_9600 # port 2
     ```

     Note: You can use any port you wish on the workstation, but keep in mind that port **1** is the workstation's alternate console port.
   - If the third field in the line is the word "off" (as in the example above), exit the file and continue with step number 3.
   - If the third field is the word "on," change it to "off." Then save the file, exit, and at the shell prompt enter this command:

     ```
     telinit q
     ```
3. Using a text editor, open the file */etc/uucp/Devices*.
   - Locate the following line:
   - # Direct ttyd2 - 9600 direct
   - Remove the number sign (#) and subsequent space at the beginning of the line:
   - Direct ttyd2 - 9600 direct
   - This change allows you to use port 2 on the workstation to connect to the Origin200 server. If you are using a different serial port, replace `ttyd2` in the line above with the name of the actual port you are using, for example `ttyd3` or `ttyd4`.
   - Save the file and exit.
4. Edit the file */etc/uucp/Systems*.
   - At the end of the file, add this line

     ```
     Direct Any Direct 9600 -
     ```
   - Save the file and exit.

5. Test the configuration on the workstation:
   - Enter this command at a shell prompt:
   - `cu Direct`
   - You should see this message:

     `Connected`

     This means that *cu* has successfully opened the serial port. You are ready to proceed to the next section, "Connecting the Serial Cable." Enter the following command to exit from *cu* and return to the shell prompt:

     `~.`

     (This is the tilde character, followed by a period.)
   - If you do not see the message "Connected," you may have made an error in one of the previous steps. Repeat this procedure, starting from step number 2. In particular, make sure that you reference the same port in each of the files */etc/inittab* and */etc/uucp/Devices*.

6.4.2.4 Connecting the Serial Cable

Connect one end of the cable into port **1** of the Origin200 server, and the other end of the cable (either DB9 or DIN-8) into the appropriate port on the workstation, for example port **2**.

6.4.2.5 Logging In To the Server

On the workstation, enter this command at a shell prompt:

```
cu Direct
```

You should see this message:

```
Connected
```

Press **<Enter>** once or twice. You should see a login prompt from the Origin200 server:

```
IRIS login:
```

At the `IRIS login:` prompt, enter **root**, **setup**, **guest**, or another account name (if you have already created one) as appropriate, and press **<Enter>**. You see some brief messages and the following prompt:

```
TERM = (vt100)
```

Enter the following terminal type and press **<Enter>**:

```
iris-ansi
```

6.5 Using the AUX Port and Module System Controller Commands

The AUX port is an 8-pin mini-DIN connector at the rear of the Origin200 server that connects to the module system controller (MSC). Figure 6-7 shows the location of the AUX port.

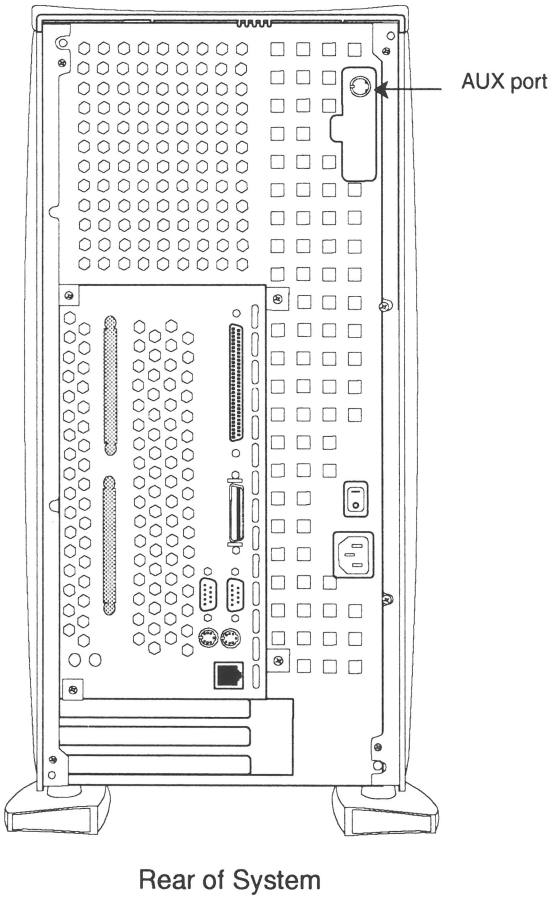

Figure 6-7 Location of the AUX Port

The AUX port uses a standard, RS-232 interface, and the pin assignments are identical to those used on Silicon Graphics Indy and Indigo2 workstations and the CHALLENGE S server. (See Appendix A, "Connector Pinout Assignments.") However, you cannot use Origin200 AUX port to log into IRIX.

6.5.1 Attaching a Terminal Or Modem to the AUX Port

To attach a terminal or modem to the AUX port, you need a serial cable with a DIN-8 connector at one end (for the AUX port), and an appropriate connector for the terminal or modem (typically a DB-25 connector) at the other end. Silicon Graphics has DIN-8 to DB-25 terminal and modem cables, and these are listed in Appendix B, "Cable Descriptions." You can also use the descriptions provided in that appendix to construct your own cables. Note

that the cables are the same as the ones used for Silicon Graphics Indy, Indigo, and Indigo^2 workstations, and the CHALLENGE S server.

Follow these steps to attach the cable:

1. Plug the DIN-8 connector into the AUX port at the back of the system. See Figure 6-7 for the location of the AUX port.
2. Attach the other end of the cable to your input device, for example a terminal, modem, or other computer.
3. Use the following settings with your terminal (or modem, or other input device):
   - 9600 baud
   - 8 data bits
   - 1 stop bit
   - no parity
   - None, or XON/XOFF flow control
4. Test the connection by pressing `<Ctrl>t` and `<Enter>`. You should see the module system controller prompt:

   ```
   MSC>
   ```

   If you do not see any response, check your cable and communications settings for your input device (terminal, modem, etc.). If this is a two-module system, be sure to plug the cable into the AUX port of the master module. Be sure there is power to the module system controller; the master power switch at the rear of the system should be on. (See Figure 6-2.)

Once you are able to see the MSC prompt, you are ready to use the module system controller.

The first task you should perform with the MSC is to reset the MSC password. See the next section, "Using the Module System Controller."

6.5.2 Using the Module System Controller

Once you have attached a terminal or other input device to the AUX port, you use the module system controller by typing `<Ctrl>t`, followed by a command. If you type `<Ctrl>t` followed by `<Enter>`, you should see the MSC prompt:

```
MSC>
```

The following sections describe various common tasks you can perform with the MSC. In all cases, you enter commands and see the indicated responses on a terminal or other input device connected to the AUX port of the Origin200 server.

6.5.2.1 Entering Supervisor Mode

To use many of the MSC functions (such as power up and power down) you must be in Supervisor Mode, and a four-character password is required to enter that mode. If you

attempt to use a protected function and are not in Supervisor Mode, you see the following error message:

```
err perm
```

(See Section 6.5.2.8 below for a list of all the possible messages.)

To enter Supervisor Mode, type the following command:

```
<Ctrl>t pass xxxx
```

In the above example, *xxxx* is the four-character password. The default for all Origin200 servers shipped from Silicon Graphics is the word "none." To enter Supervisor Mode on an Origin200 system with the default Supervisor Mode password, type:

```
<Ctrl>t pass none
```

We recommend you change this to a different password. See the next section, "Setting the MSC Password."

6.5.2.2 Setting the MSC Password

Supervisor Mode on the MSC is protected by a four-character password. By default, every Origin200 server ships with an MSC password, which is the word "none." To change the password, enter:

```
<Ctrl>t pass s xxxx
```

In the above example, *xxxx* is the new four-character password. The password must be exactly four characters long.

6.5.2.3 Checking the System Temperature

To check the system temperature, enter this command:

```
<Ctrl>t tmp
```

If you see the letter `n`, the system is running at a normal temperature. If you see the letter `o`, the system is running at over the normal temperature. You should verify that all the fans are working properly and that airflow into and out of the system is not blocked. If there are no problems with airflow, but the ambient air temperature is such that the system is running over-temperature, you can compensate by setting the fans to run at a higher speed. See "Checking and Setting the Fan Speed."

If you see the letter `h`, the system is running at a dangerously high temperature and should be shut down until the cause of the problem is determined.

6.5.2.4 Checking and Setting the Fan Speed

To check the fan speed, enter this command:

```
<Ctrl>t fan
```

If you see the letter `n`, the fans are running at their normal speed. If you see the letter `h`, the fans are running at high speed. Be aware that if the fans are running at high speed it could be because one of the fans has failed and the MSC has automatically increased the speed of the remaining two fans to compensate. You should inspect the system to make sure all the fans are running properly, that airflow through the system is not blocked, and that the temperature of the air where the Origin200 server is installed is within proper specifications. To determine the proper ambient air temperature, see "Physical and Environmental Specifications" in Chapter 1.

If all of the fans are running at normal speed, but the system temperature is high, you can increase the fan speed to compensate.

To run the speed the fans at high speed, enter this command:

```
<Ctrl>t fan h
```

To run the speed the fans at low speed, enter this command:

```
<Ctrl>t fan n
```

6.5.2.5 Checking If the System Is On or Off

To check if the system is on or off, enter this command:

```
<Ctrl>t pwr
```

If you see the letter `u`, the power supply is on (sending power to the drives, PCI boards, fans, and logic carrier). If you see the letter `d`, the power supply is sending only sending 5V to the MSC and the reset of the system is off.

6.5.2.6 Powering the System On and Off

To turn on power to the system (drive, CPU, memory, PCI cards, and so forth), enter this command:

```
<Ctrl>t pwr u
```

To turn off power to the system, enter this command:

```
<Ctrl>t pwr d
```

Be aware that the power-down command does not halt the operating system (IRIX) and applications gracefully. To shut the system down gracefully, you should first shut down the operating system, then turn off power. See "Turning the System On and Off."

6.5.2.7 Resetting the System

To reset the system, use this command:

```
<Ctrl>t rst
```

6.5.2.8 MSC Error Messages

Many of the commands display the text `ok` if they succeed. If there is a problem, the MSC prints the following error messages when you enter incorrect commands:

Table 6-3 Module System Controller (MSC) Error Messages

Message	Meaning
err perm	You do not have permission to use this command. You must enter Supervisor Mode with *pass* in order to use this command.
err cmd	The command you entered is not valid, or you typed the command incorrectly.
err arg	The argument you gave with a command is not valid, or you typed in incorrectly.

6.5.2.9 MSC Command Reference

The module system controller (MSC) accepts the following commands:

Table 6-4 Module System Controller (MSC) Commands

Command	Function
clr	Resets all MSC options to their power-up defaults. This includes echo mode, no heartbeats, and so forth.
ech 0	Turns off echoing as MSC commands are entered. This means you won't see what you type.
ech 1	Turns on echoing. You see what you type.
ech	Toggles the echoing. (Echoing is on by default after the system is reset.)
fan	Checks the speed of the fans. The command displays an `n` if the fans are operating at a normal speed, and an `h` if the fans are operating at a high speed. Note that the MSC will automatically switch the fan speed to high if one of the fans fails.
fan n	Set the fans to run at normal speed.
fan h	Set the fans to run at high speed.
nmi	Send a hardware nonmaskable interrupt (NMI) to the system.
pas *xxxx*	Enter Supervisor Mode; xxxx is the four-character password for your system. All Origin200 servers ship with the word "none" as the default password.
pass s *xxxx*	Set the password to xxxx. Note that the password must be exactly 4 characters long.
pwr	Displays `u` if the power is on and `d` if the power is off.
pwr u	Turns on power to the drives, logic carrier, fans, and PCI boards.
pwr d	Turns off power to the drives, logic carrier, fans, and PCI boards.
pwr d *N*	Waits *N* seconds and then powers the system down. *N* is a hexadecimal value from 5 to 258 (5 to 600 decimal).

Table 6-4 (continued) Module System Controller (MSC) Commands

Command	Function
pwr c *N*	Waits *N* seconds and then powers the system up. *N* is a hexadecimal value from 5 to 258 (5 to 600 decimal).
rst	Sends a hardware reset to the system.
sel cpu	Select which CPU is to receive input from the MSC. Anything typed on the MSC which is not an escaped command is sent through to the selected CPU. CPUs are named by module and slice. For example, `sel 1a` selects CPU A in module 1 for input, and `sel 2b` selects CPU B in a second (slave) module.
sel	Displays which CPU is currently selected to receive MSC input. Prints none if no CPU is selected.
sel auto	Causes the last CPU to have output anything to be automatically selected to receive MSC input (this is the power-up default).
see cpu	Causes no CPU to be selected to receive MSC input.
see	Causes output from all CPUs other than a specific CPU to be discarded (ordinarily, the output from all CPUs is displayed intermixed by line). CPUs are named by module and slice. For example, `see 2a` would cause only CPU 2A's output to be shown.
see all	Causes output from all CPUs to be displayed (this is the power-up default).
tmp	Displays o, h, or n, indicating whether the system is over-temperature, dangerously high-temperature, or normal temperature, respectively.
ver	Reports the MSC firmware revision number.

6.6 Determining What Devices are Installed On the Server

Because the Origin200 server, like the rest of the Origin product line, is a highly-configurable, multi-module system, there are some differences in the way that devices are identified and configured from prior Silicon Graphics workstations and servers.

You can still use the *hinv* command to list devices installed in the system. However, there is a new tool available, the */hw* filesystem, and some things to be aware of regarding the way devices are detected and numbered.

6.6.1 How Devices are Detected and Numbered

When the system boots, it probes all of the attached hardware. As it enters multiuser mode, it runs the *ioconfig* utility, which examines the */hw* filesystem (described in the next section, Section 6.6.2) to assign unique controller numbers for each device it finds. The results of this process are stored in the file */etc/ioconfig.conf*, which maps logical controller numbers to device names.

Be aware of the following:

- When the system boots and probes hardware, there is no guarantee that it will detect devices in a particular order (except for certain fixed devices in the master module, such as the console serial port, SCSI controllers 0 and 1, and the primary Ethernet port).
- When you remove devices from the system, the logical controller numbers are not automatically removed from */etc/ioconfig.conf*.

You can change the way that devices are numbered by editing the file */etc/ioconfig.conf*. See ioconfig(1M) for more information.

6.6.2 How to Use the Hardware Graph

The hardware graph is a tool for inventorying the I/O devices on all Silicon Graphics Origin and Onyx2 systems. Unlike *hinv*, the hardware graph is an IRIX filesystem, whose branching character accommodates the possibility of multiple nodes, each with multiple I/O devices of several types. The hardware graph keeps track of information in the kernel that is associated with the hardware.

Most of the hardware graph directories are much like their */dev* counterparts, but module numbers are persistent across reboots and hardware changes (until you change the module numbers).

To see the hardware graph, use the *ls* command. For example:

```
# ls /hw
console       input2        mmem          scsi          zero
cpunum        kmem          module        scsi_ctlr
disk          machdep       nodenum       tape
external_int  mem           null          ttys
input         midi          rdisk         unknown
```

The contents of the directories can either be IRIX special device files or subdirectories. In this output, for example, `module`, `rdisk`, `ttys`, `scsi`, `scsi_ctrl`, and `ttys` are subdirectories containing files. For example:

```
# ls /hw/ttys
tty4d1   tty4f1   tty4m1   ttyc1   ttyd1   ttyf1   ttym1   ttymidi1
tty4d2   tty4f2   tty4m2   ttyc2   ttyd2   ttyf2   ttym2   ttymidi2
tty4d3   tty4f3   tty4m3   ttyc3   ttyd3   ttyf3   ttym3   ttymidi3
tty4d4   tty4f4   tty4m4   ttyc4   ttyd4   ttyf4   ttym4   ttymidi4

# ls /hw/scsi
sc0d110  sc0d215  sc0d412  sc0d517  sc1d314  sc2d211  sc2d316  sc2d513
sc0d111  sc0d216  sc0d413  sc1d110  sc1d315  sc2d212  sc2d317  sc2d514
sc0d112  sc0d217  sc0d414  sc1d111  sc1d316  sc2d213  sc2d410  sc2d515
sc0d113  sc0d310  sc0d415  sc1d112  sc1d317  sc2d214  sc2d411  sc2d516
sc0d114  sc0d311  sc0d416  sc1d113  sc2d110  sc2d215  sc2d412  sc2d517
sc0d115  sc0d312  sc0d417  sc1d114  sc2d111  sc2d216  sc2d413  sc2d610
```

```
sc0d1l6  sc0d3l3  sc0d5l0  sc1d1l5  sc2d1l2  sc2d2l7  sc2d4l4  sc2d6l1
sc0d1l7  sc0d3l4  sc0d5l1  sc1d1l6  sc2d1l3  sc2d3l0  sc2d4l5  sc2d6l2
...
# ls /hw/rdisk
dks1d2s0        dks1d2vh        root            volume_header
dks1d2s1        dks1d2vol       swap

# ls /hw/scsi_ctlr
0  1  3  4
```

To determine the number of nodes present in the system, enter

```
# ls /hw/module
1  2
```

This indicates two nodes.

Modules and slots are numbered with base 1; PCI slots are numbered with base 0. Nodes are numbered 1 and 2. The hardware graph lists only devices actually present, skipping the numbers of unfilled slots.

To determine I/O devices of the module, follow the directory structure. Figure 6-8 shows a simplified example of a */hw/module* filesystem with two nodes (modules); in the second module, there are two CPUs and one XIO board.

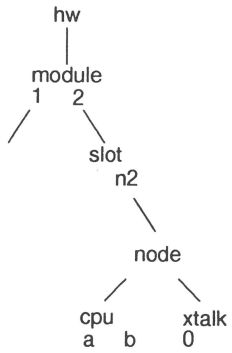

Figure 6-8 Example */hw* Filesystem

For example:

```
# ls /hw/module/1/slot/n2/node/link/cpu
0  1
# ls /hw/module/1/slot/n2/node/link/xtalk
0
```

To see connectivity of an I/O device, use *ls* in the */link* subdirectory with the ***-l*** flag. For example, determine the links present in the system:

```
# ls /hw/module/1/slot/n1/node/link
1  2  3  5  6
```

6.7 Removing and Replacing the System Cover and Chassis Access Panel

Caution: Because of the weight of an Origin200 system, two people are required to lift and move the chassis.

To remove the system cover and chassis access panel of an Origin200 server, follow these steps:

1. Power off the system. See "Turning Off the System" on page 6.
2. Remove the side panel, as shown in Figure 6-9.
   - Using a #2 Phillips screwdriver, remove the two screws that secure the side panel to the chassis.
   - Pull the rear edge of the side panel away from the rear of the system.
   - Slide the side panel back and off the system.

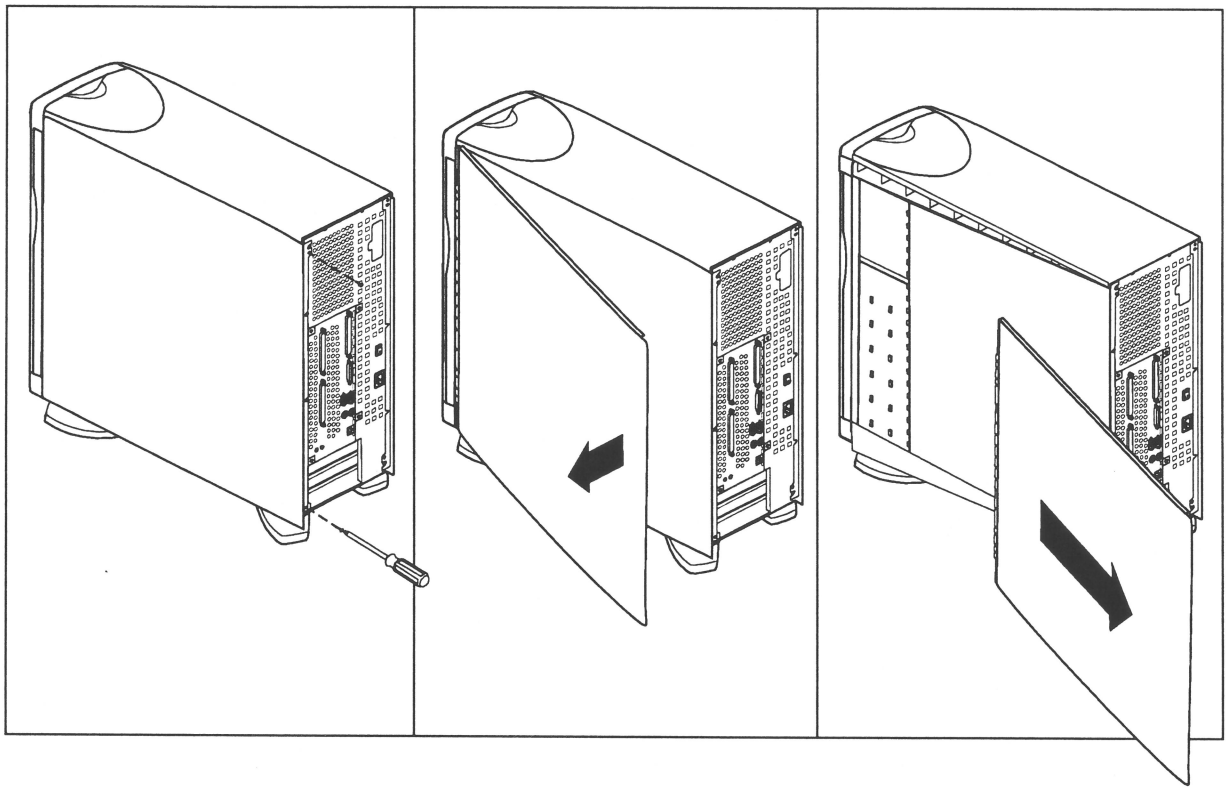

Figure 6-9 Removing the Side Panel, Tower Origin200 Server

3. Open the chassis access door, as shown in Figure 6-10.
   - Using a #2 Phillips screwdriver, remove the two screws that secure the door to the chassis.
   - Swing the door out, away from the chassis.

- *Optional*: you can remove the door by lifting it up slightly and away from the chassis. In some cases, it may be easier to service the Origin200 if you remove the chassis access door.

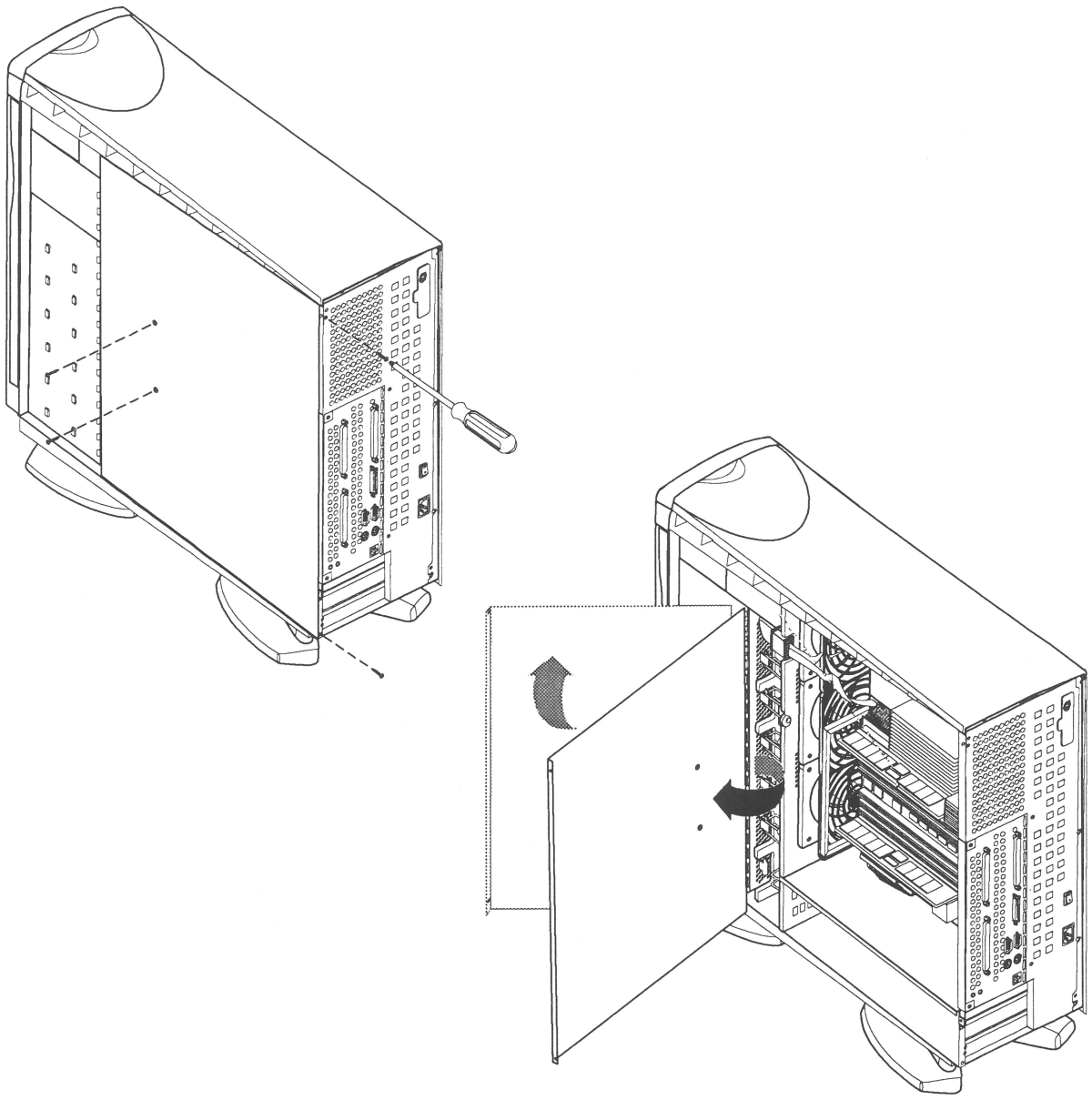

Figure 6-10 Opening the Chassis Access Door, Tower Origin200

6.8 Locking the System

The Origin200 provides two mechanisms to physically lock the system:

- a key lock on the front door
- removable tabs to lock the chassis cover

Both of these mechanisms are designed to provide enough security for your system that, if it is locked, the only way to remove components from the server, or to move it, is to destroy some part of the server.

6.8.1 Locking the Front Door

To lock the front door

1. Insert one of the keys (provided with the system) into the lock on the front door.
2. Turn it 1/4 turn (90-degrees) to the right (clockwise).
3. Remove the key.

To unlock the front door, turn the key 1/4 turn (90 degrees) to the left.

6.8.2 Locking the Chassis

To lock the chassis, you use the two metal tabs that are provided with the system. Figure 6-11 provides an overview of the process.

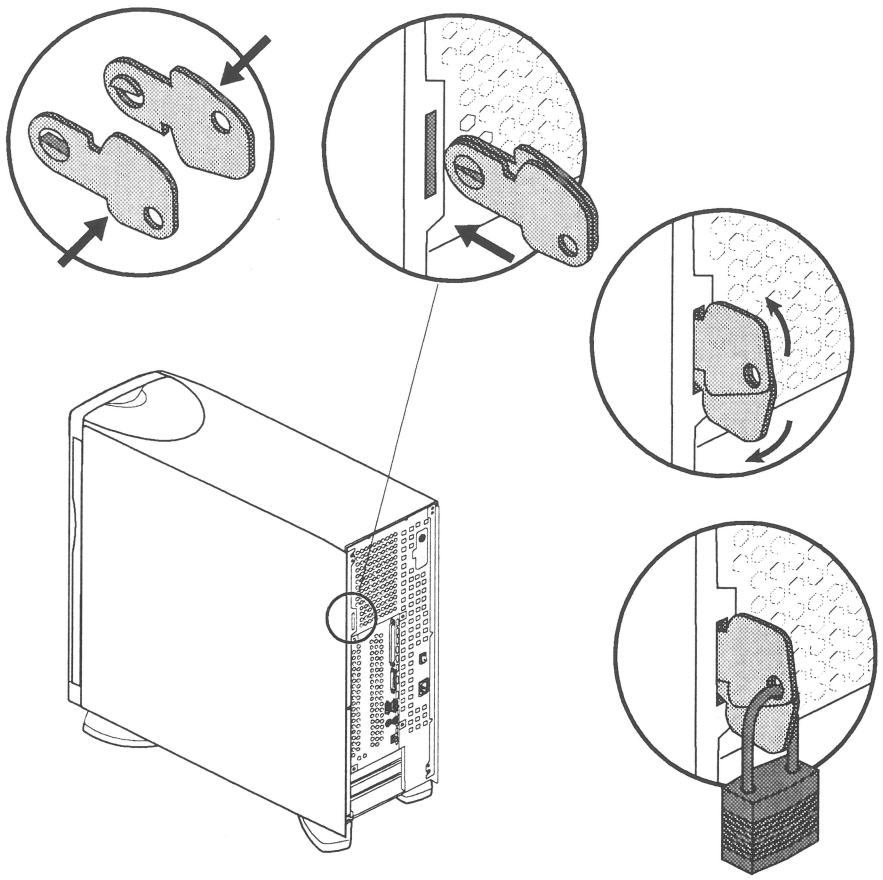

Figure 6-11 Locking the Chassis With the Locking Tabs

Follow these steps to lock the chassis (refer to Figure 6-11).

1. Place the two locking tabs together, flat, so that the pivot points join.
2. Insert the two tabs into the tab slot at the rear of the chassis.
3. Spread tabs apart in a scissor-like fashion so that the two exposed holes in the tabs align.
4. Insert a lock, cable, or other device through the holes in the tabs.

6.9 Adjusting the Feet

The feet on an Origin200 server in a tower configuration can be swiveled in or out. See Figure 6-12.

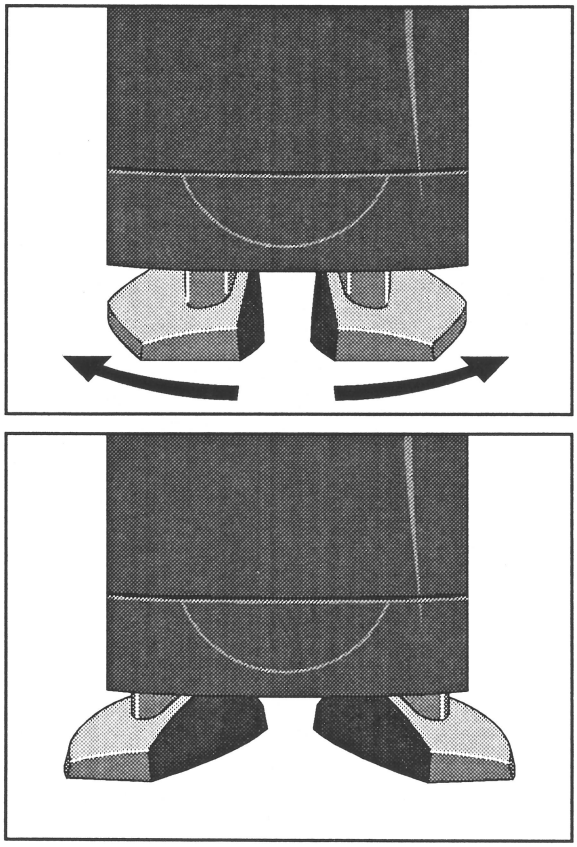

Figure 6-12 Adjusting the Feet

To adjust the feet:

1. Raise the server slightly, or tilt it to one side.
2. Press in or pull out on the feet, as desired.

Chapter 7

Installing and Removing Memory

This chapter describes how to install and remove dual in-line memory modules (DIMMs) in a Origin200 server.

7.1 Handling Precautions



Warning: **Memory is extremely sensitive to electrostatic discharge (ESD). Observe the following precautions when installing and removing memory:**

- Handle the DIMMs by their edges only and do not touch the gold connector pads.
- Handle DIMMs with care. Do not toss them roughly onto hard surfaces, such as tables or other equipment.
- Do not leave them loose inside the chassis while you work.
- When you are not handling them for installation or removal, always keep them in ESD containers, such as conductive bags or foam.
- Save the ESD bags or containers in which the memory option was shipped in case you need to remove the DIMMs from the system.

7.2 About Origin200 Memory

Observe these rules about installing DIMMs:

- DIMMs must be installed in pairs.
- Each DIMM of a pair must be the same size (e.g., 32 MB, 64 MB, etc.)
- You can mix memory sizes between banks. In other words, bank 1 can have a pair of 32 MB DIMMs while bank 2 has a pair of 64 MB DIMMs and bank 3 has another pair of 32 MB DIMMs.
- Each module must have memory installed (32 MB minimum per module)

7.3 Installing Memory

Follow these steps to install memory in an Origin200 server.

1. Shut down the system completely. See "Turning Off the System" in Chapter 6.
   - Be sure to turn off the master power switch.
2. Prepare the system for servicing.
   - Disconnect any cables from the rear of the chassis.
   - If you have to move the system, you may find it easier to lift and carry if you remove the disk drives first.
   - If the system is mounted in an equipment rack, remove it from the rack and place it on a sturdy work surface. See "Removing a Server From an Equipment Rack" in Chapter 5.
3. Open the system
   - If the system is in a tower configuration, remove the side panel. See "Removing and Replacing the System Cover and Chassis Access Panel" in Chapter 6.
   - Remove the chassis access panel (tower and rack systems). See "Removing and Replacing the System Cover and Chassis Access Panel" in Chapter 6.
   - If the system is in a tower configuration, place it on its side on a sturdy work surface.
4. Attach a grounding strap to your wrist.
   - All Silicon Graphics options, including memory, are shipped with wrist straps to help prevent damage to components from static electricity.
   - Attach the strap to your wrist as shown on the wrist-strap package, and in Figure 7-1.

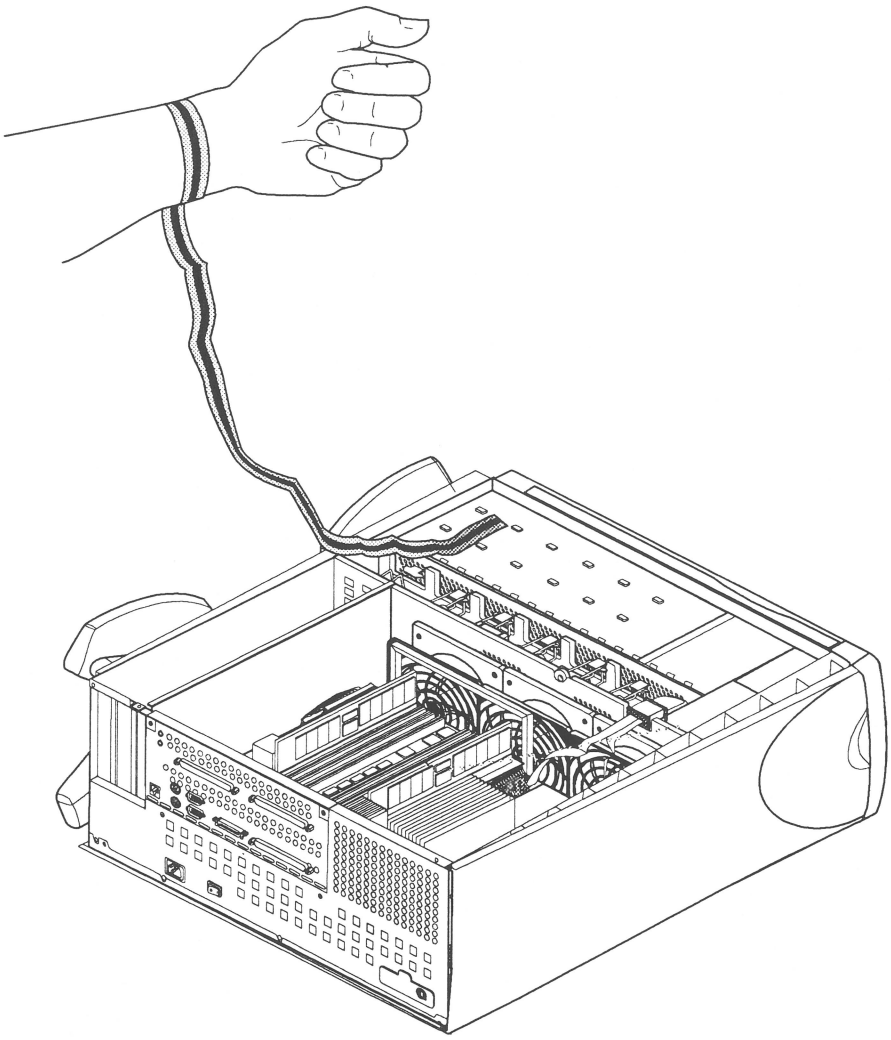

Figure 7-1 Attaching A Grounding Wrist Strap

5. Locate the DIMM slots. See Figure 7-2.

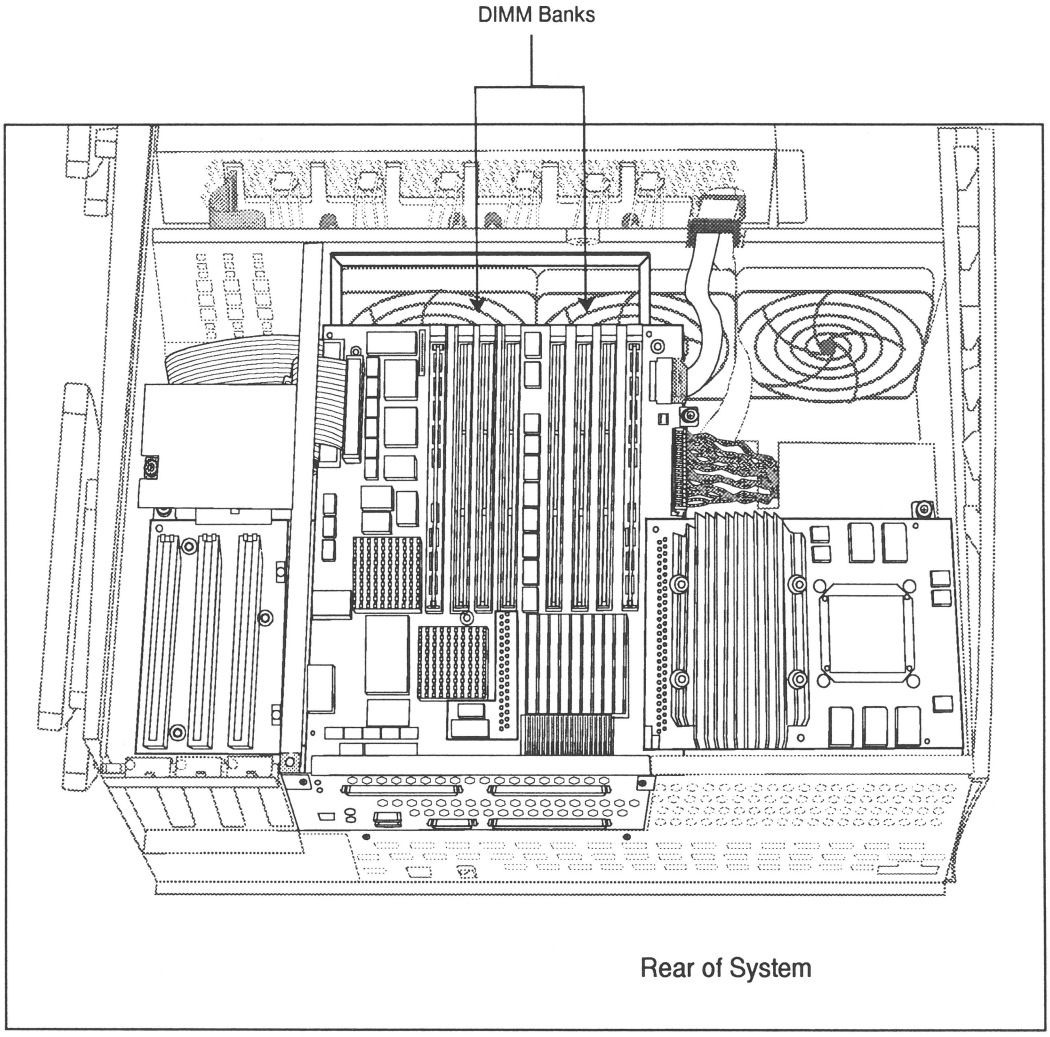

Figure 7-2 Locating DIMMs In the Origin200

6. Install DIMMs in pairs, starting with the pair farthest away from the center of the banks and working inward. Figure 7-3 shows the grouping of DIMM pairs:

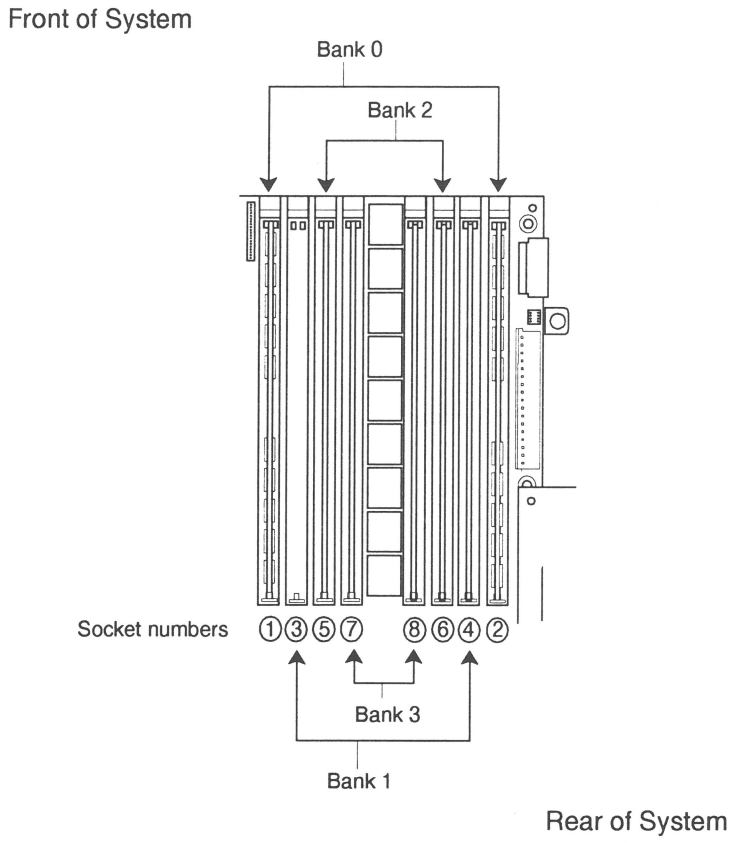

Figure 7-3 How DIMM Pairs Are Grouped in Origin200

- Figure 7-3 shows one pair of DIMMs installed in bank 1 (mandatory)
- If you are installing one additional pair of DIMMs, install them in bank 2.
- Install a third pair of DIMMs in bank 3.
- Install a fourth pair of DIMMs in bank 4.
- Figure 7-4 shows how to insert a DIMM into its socket.

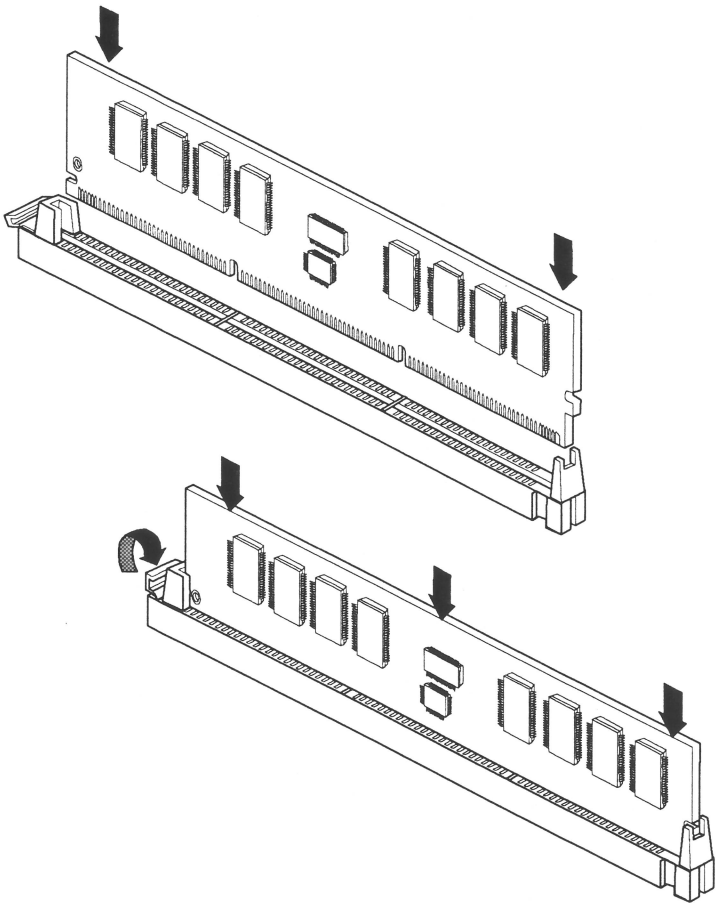

Figure 7-4 Installing a DIMM

- As you lower the DIMM into its socket, press down first on one side then the other to seat the DIMM (upper drawing).
- Press straight down across the entire top to make sure the DIMM is firmly seated. Avoid placing sideways pressure on the DIMM. The DIMM-release lever should move upward and towards the edge of the DIMM when it is completely seated.

7. After you have finished installing DIMMs, remove your wrist strap and reassemble the system.
   - Replace the chassis access door and side panel (the reverse of removing them).
   - Reattach the cables to the back of the system.

You are now ready to test verify that the memory is recognized by the system.

7.4 Verifying That Installed Memory Is Recognized By The System

After you have installed memory, you can verify that it is recognized by the system. Follow these steps:

1. Log in to the server.
   - You can log in as root, guest, or any account you wish.
2. At a shell prompt, enter the following command:

   ```
   hinv -t memory
   ```

   You should see a message similar to this:

   ```
   Main memory size: 128 Mbytes
   ```

   If you originally had 64 MB of memory and you installed an additional 64 MB, *hinv* should report that the system has 128 MB of memory.

If hinv does not report the correct amount of memory, it may be because one or more of the DIMMs you installed is not seated correctly. Shut down the system and reseat the DIMMs.

7.5 Removing Memory

Follow these steps to remove memory from an Origin200 server.

1. Shut down the system completely. See "Turning Off the System" in Chapter 6.
   - Be sure to turn off the master power switch.
2. Prepare the system for servicing.
   - Disconnect any cables from the rear of the chassis.
   - If you have to move the system, you may find it easier to lift and carry if you remove the disk drives first.
   - If the system is mounted in an equipment rack, remove it from the rack and place it on a sturdy work surface. See "Removing a Server From an Equipment Rack" in Chapter 5.
3. Open the system
   - If the system is in a tower configuration, remove the side panel. See "Removing and Replacing the System Cover and Chassis Access Panel" in Chapter 6.
   - Remove the chassis access panel (tower and rack systems). See "Removing and Replacing the System Cover and Chassis Access Panel" in Chapter 6.
   - If the system is in a tower configuration, place it on its side on a sturdy work surface.
4. Attach a grounding strap to your wrist. Figure 7-5 shows an example of a disposable grounding strap.

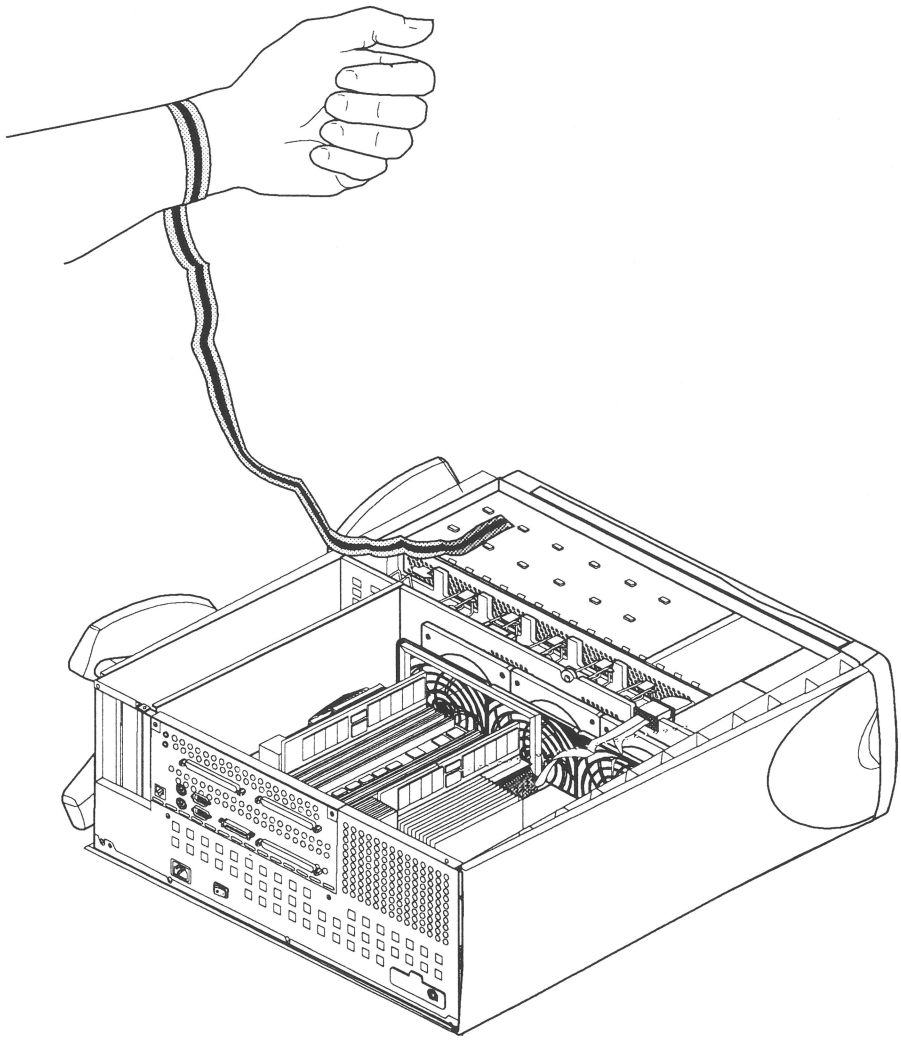

Figure 7-5 Attaching A Grounding Wrist Strap

5. Locate the DIMMs. See Figure 7-6.

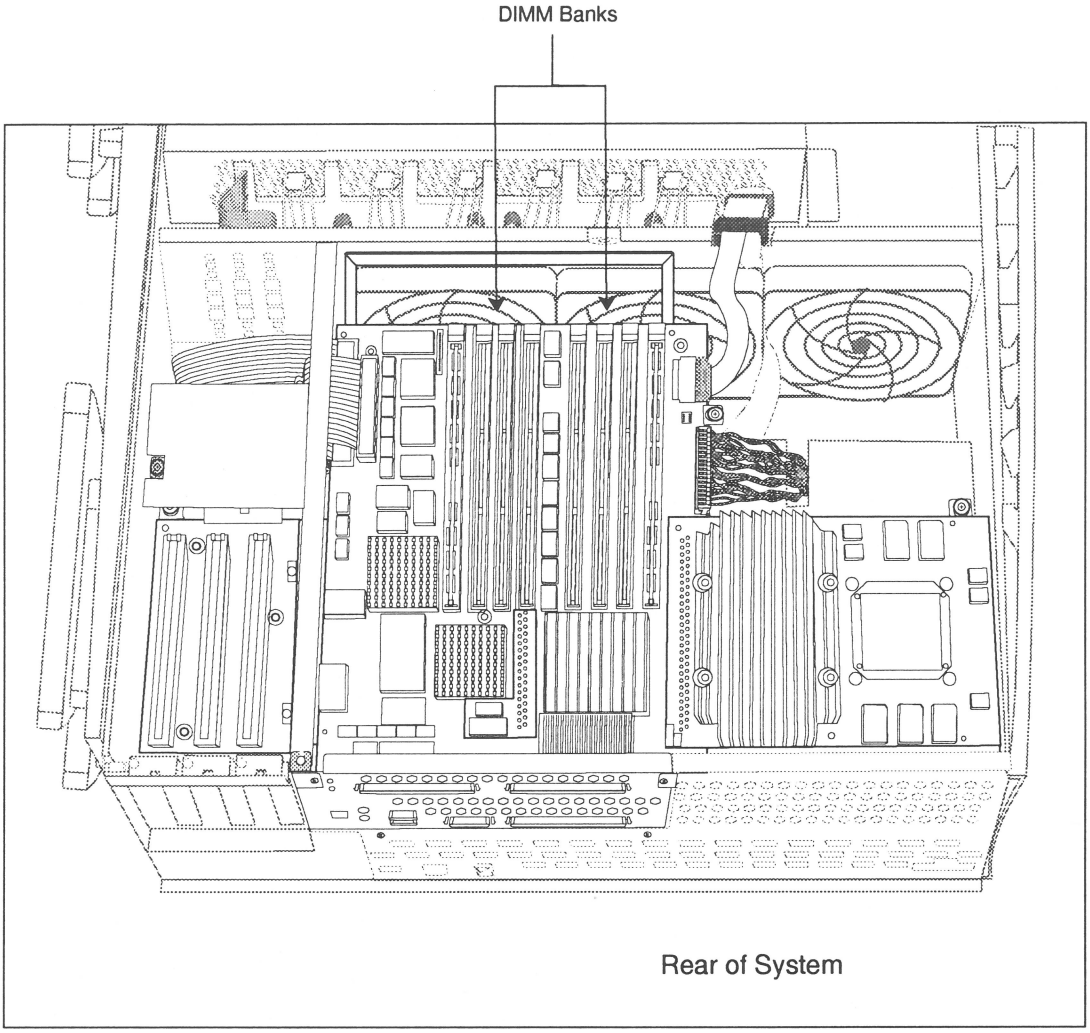

Figure 7-6 Locating DIMMs In the Origin200

6. Always remove DIMMs in pairs. starting with the pair closest to the center of the banks (bank 4). See Figure 7-7.

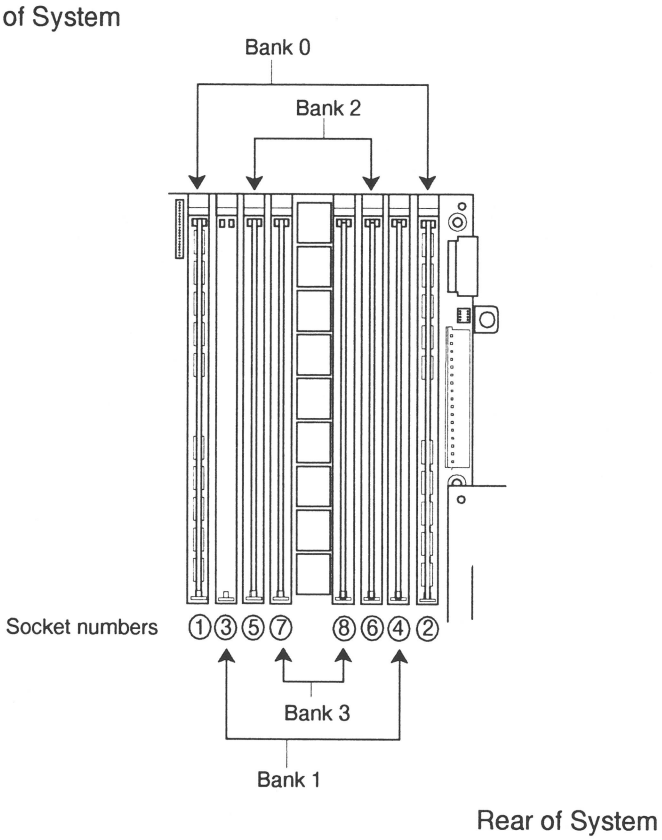

Figure 7-7 How DIMM Pairs Are Grouped In Origin200

- Start by removing bank 4, then bank 3, then bank 2.
- You must have at least one bank of memory installed in both nodes in order for the system to operate. You cannot operate a two-node system unless there are DIMMs installed in both nodes.
- Figure 7-8 shows how to remove the DIMMs from their sockets.

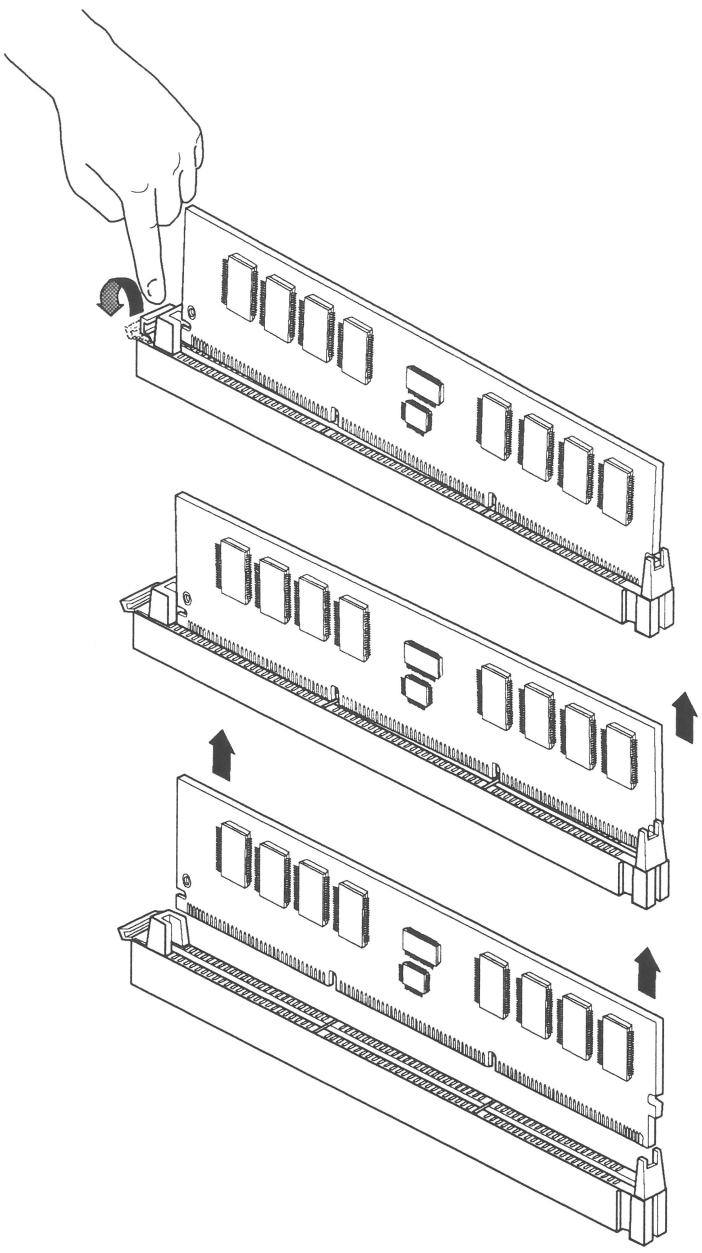

Figure 7-8 Removing DIMMs

- Press down on the release lever for the DIMM you want to remove.
- The lever raises the DIMM out of that side of its socket.
- Grasp the DIMM along the edges and pull it up out of its socket with an end-to-end rocking motion. (Avoid excess side-to-side motion, as this may damage the socket.)

7. After you have finished removing DIMMs, remove your wrist strap and reassemble the system.
   - Replace the chassis access door and side panel (the reverse of removing them).
   - Reattach the cables to the back of the system.

Chapter 8

Installing and Removing PCI Option Boards

This chapter describes how to install and remove PCI option boards in a Origin200 server.

8.1 Handling Precautions



Warning: Option boards are sensitive to electrostatic discharge (ESD). Observe the following precautions when installing and removing memory:

- Handle the boards by their edges only and do not touch the gold edge-connectors and components on the board.
- Handle boards with care. Do not toss them roughly onto hard surfaces, such as tables or other equipment. Many boards have components fragile, surface-mount components on their undersides; these components can break off with rough handling.
- Do not leave the option boards loose inside the chassis while you work.
- When you are not handling them for installation or removal, always keep the option boards in ESD containers, such as conductive bags or foam.

Save the ESD bags and containers in which the PCI option was shipped in case you need to remove the board from the system.

8.2 Installing a PCI Option Board

The following steps describe how to install a PCI option board into a Origin200 server.

1. Shut down the system completely. See "Turning Off the System" in Chapter 6.
   - Be sure to turn off the master power switch.
2. Prepare the system for servicing.
   - Disconnect any cables from the rear of the chassis.
   - If you have to move the system, you may find it easier to lift and carry if you remove the disk drives first.

- If the system is mounted in an equipment rack, remove it from the rack and place it on a sturdy work surface. See "Removing a Server From an Equipment Rack" in Chapter 5.

3. Open the system
   - If the system is in a tower configuration, remove the side panel. See "Removing and Replacing the System Cover and Chassis Access Panel" in Chapter 6.
   - Remove the chassis access panel (tower and rack systems). See "Removing and Replacing the System Cover and Chassis Access Panel" in Chapter 6.
   - If the system is in a tower configuration, place it on its side on a sturdy work surface.
4. Attach a grounding strap to your wrist.
   - All Silicon Graphics options, including PCI boards, are shipped with wrist straps to help prevent damage to components from static electricity.
   - Attach the strap to your wrist as shown on the wrist-strap package, and in Figure 8-1.

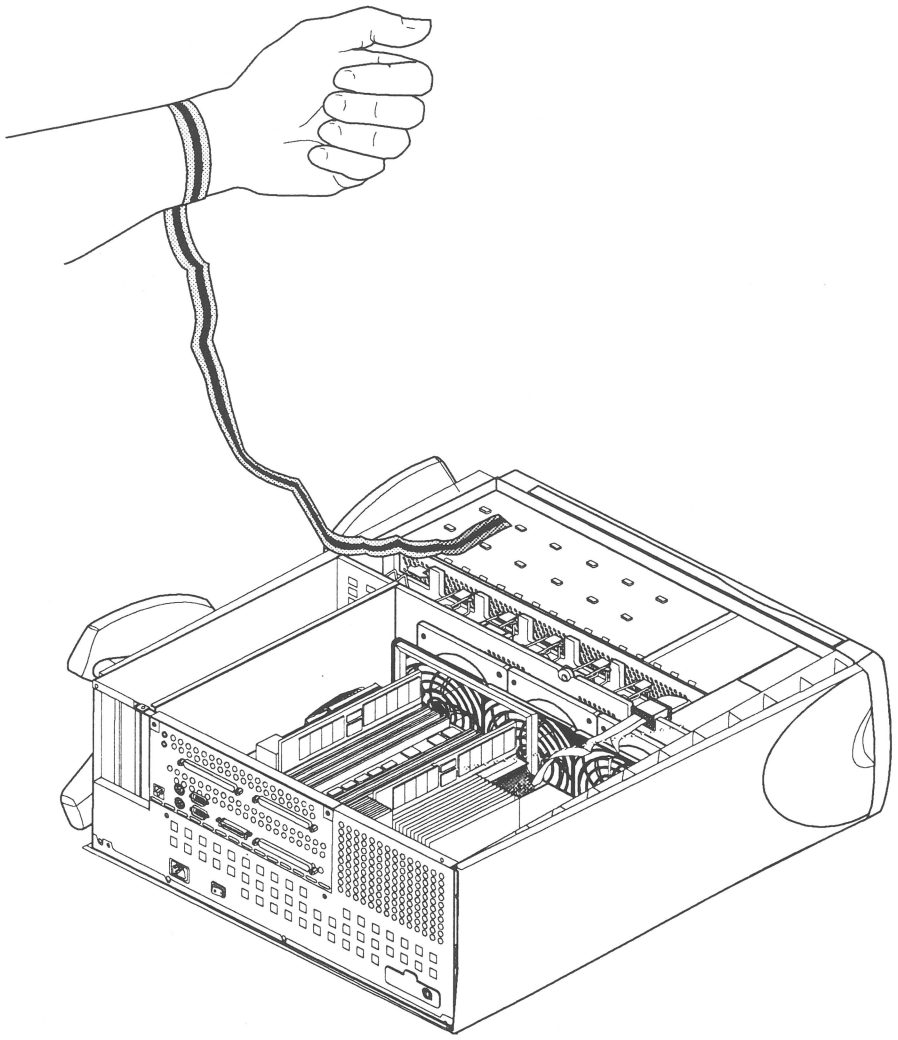

Figure 8-1 Attaching A Grounding Wrist Strap

5. Locate an available PCI option slot. See Figure 8-2.
    - Although you can install a PCI board in any open slot, you may observe better I/O performance if you install boards starting in order with slot 5, particularly if the PCI board you are installing can perform prefetching.

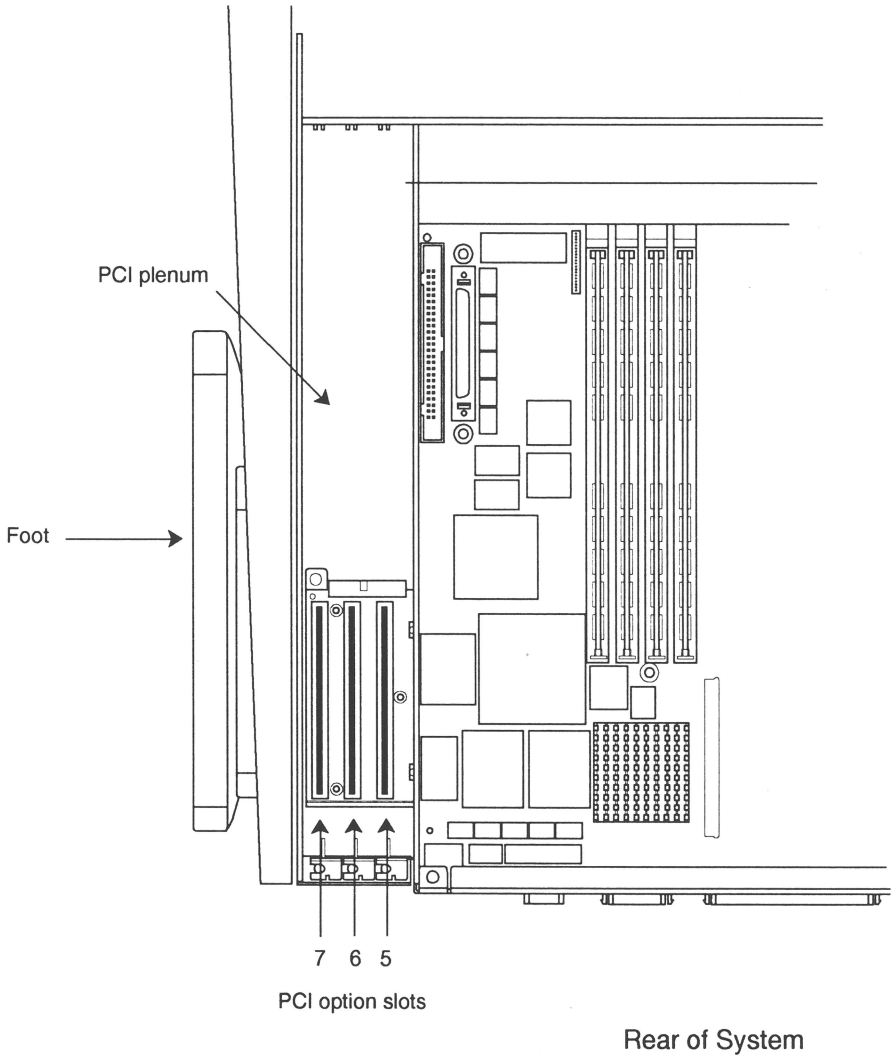

Figure 8-2 Locating the PCI Option Slots

6. Remove the blanking plate.
   - Using a #2 Phillips screwdriver, remove the single screw that secures the blanking pate to the chassis. See Figure 8-3.
   - Remove the blanking plate by lifting it straight up, as shown in Figure 8-3.

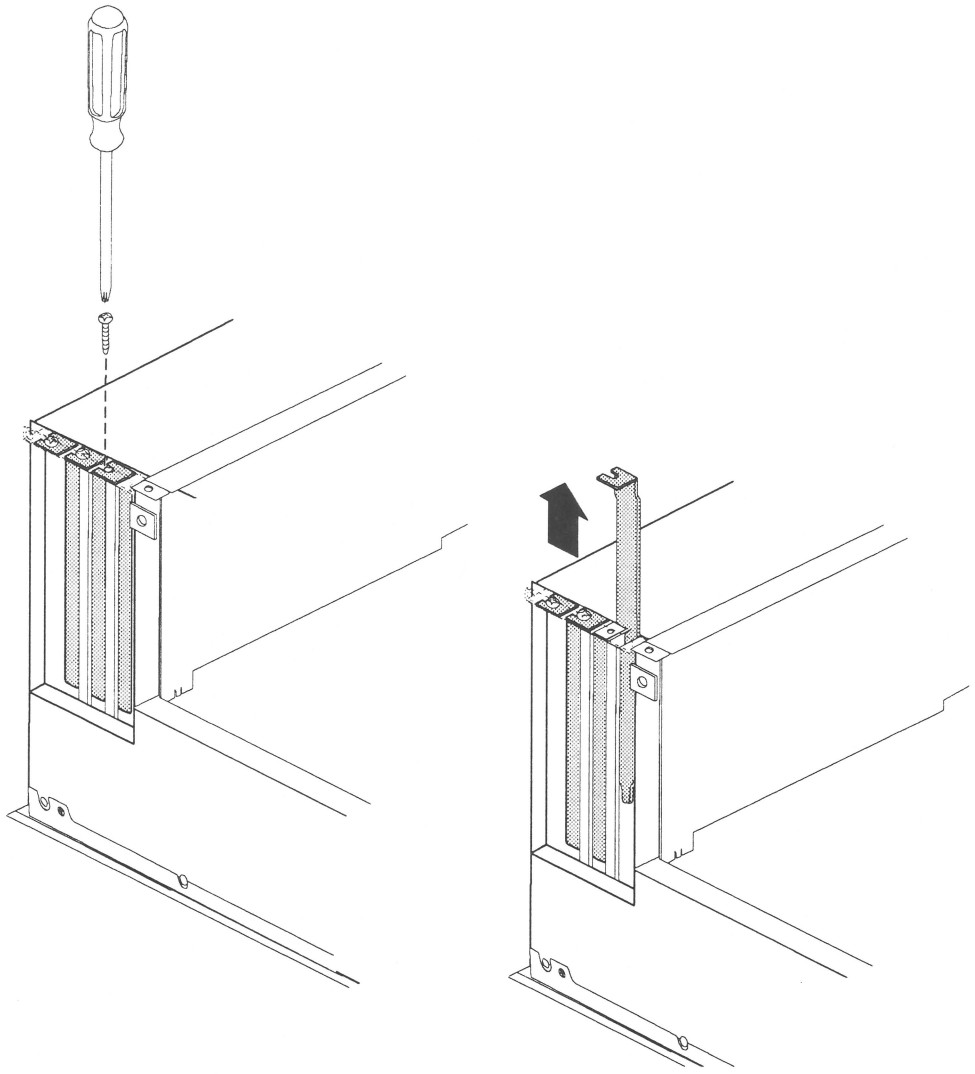

Figure 8-3 Removing a PCI Slot Blanking Plate

7. Install the PCI option board in the PCI slot.
    - Align the connector on the base of the PCI card with the PCI slot, as shown in Figure 8-4.
    - Press the card down into the slot until it engages. See Figure 8-4.
    - Be sure the tab at the bottom of the PCI card plate should slides into the slot on the rear chassis wall.
    - Press firmly until the board is seated. You may find that a slight front-to-back rocking motion helps seat the board more easily.
    - Be careful not to kink or damage the flexible EMI gasket that surrounds the inside of the rear chassis wall.
    - Attach the screw that secures the PCI option board to the chassis, as shown in Figure 8-4.

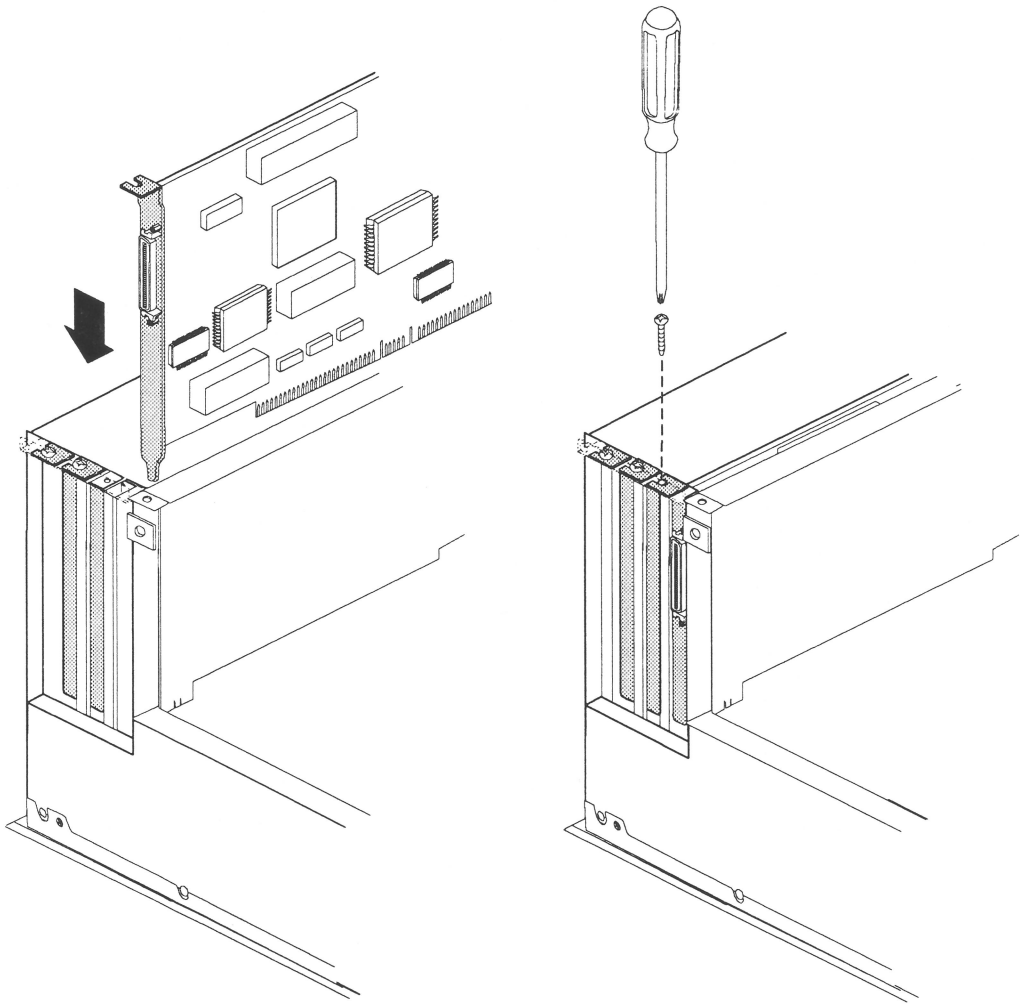

Figure 8-4 Inserting a PCI Option Board

8. After you have finished installing the PCI board, remove your wrist strap and reassemble the system.
   - Replace the chassis access door and side panel (the reverse of removing them).
   - Reattach the cables to the back of the system.

Note: Do not discard the blanking plate that you removed from the Origin200 chassis. If you ever decide to remove the PCI option board, you must replace this blanking plate to ensure proper airflow through the Origin200 chassis.

8.3 Removing a PCI Option Board

The following steps describe how to remove a PCI option board from a Origin200 server.

1. Shut down the system completely. See "Turning Off the System" in Chapter 6.
   - Be sure to turn off the master power switch.
2. Prepare the system for servicing.
   - Disconnect any cables from the rear of the chassis.
   - If you have to move the system, you may find it easier to lift and carry if you remove the disk drives first.
   - If the system is mounted in an equipment rack, remove it from the rack and place it on a sturdy work surface. See "Removing a Server From an Equipment Rack" in Chapter 5.
3. Open the system
   - If the system is in a tower configuration, remove the side panel. See "Removing and Replacing the System Cover and Chassis Access Panel" in Chapter 6.
   - Remove the chassis access panel (tower and rack systems). See "Removing and Replacing the System Cover and Chassis Access Panel" in Chapter 6.
   - If the system is in a tower configuration, place it on its side on a sturdy work surface.
4. Attach a grounding strap to your wrist. Figure 8-5 shows an example of a disposable grounding strap.

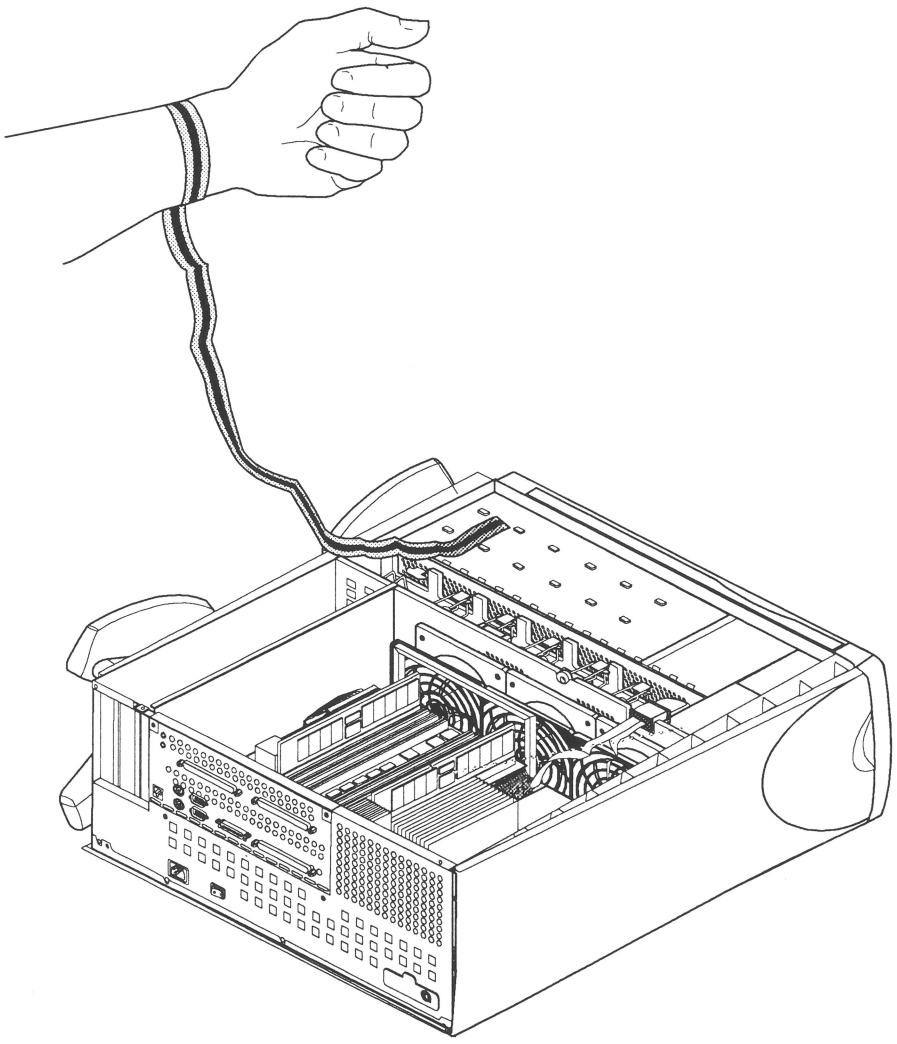

Figure 8-5 Attaching A Grounding Wrist Strap

5. Locate the PCI option board you wish to remove.
6. Remove the board.
    - Using a #2 Phillips screwdriver, remove the screw that secures the PCI option board to the Origin200 chassis, as shown in Figure 8-6.

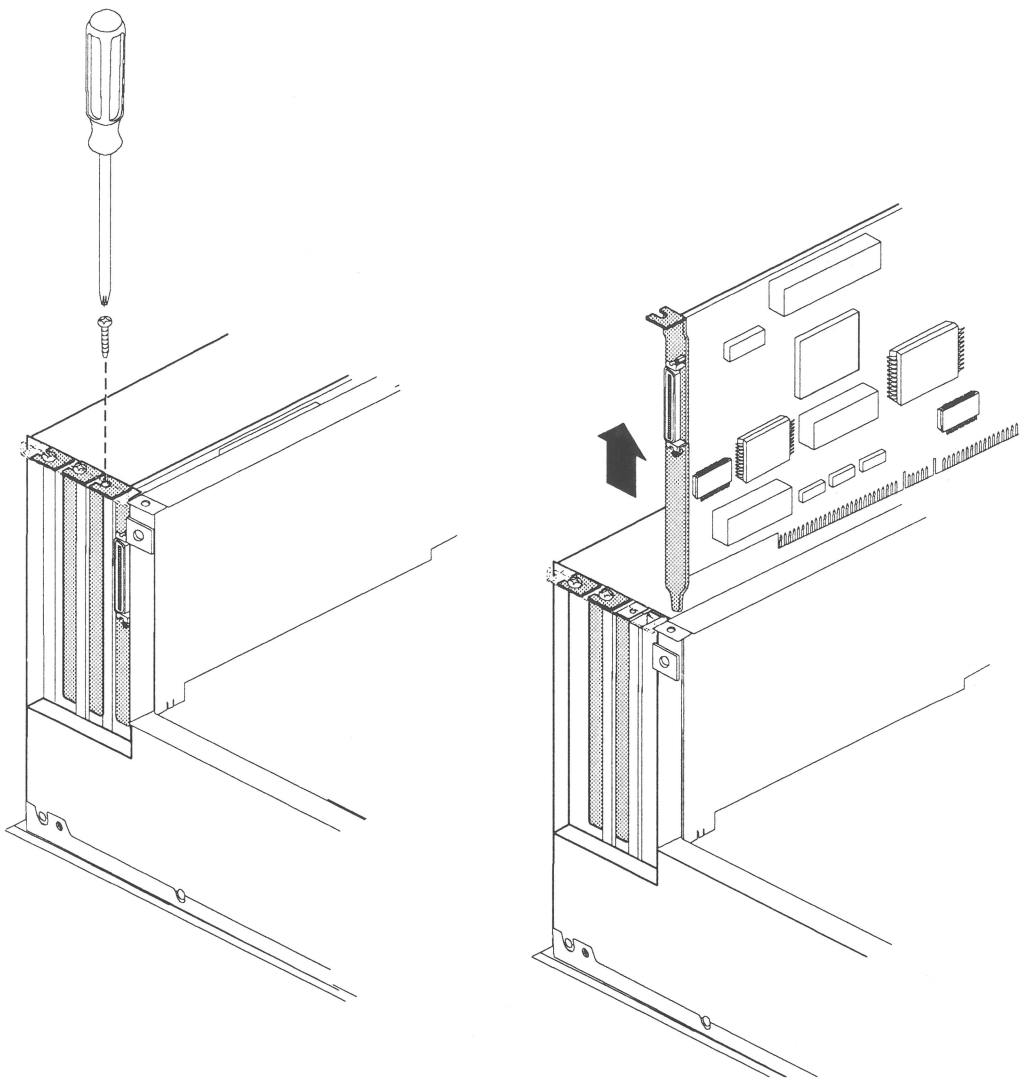

Figure 8-6 Removing a PCI Option Board Screw and Board

- Grasp the PCI option board at the front and rear of the board and pull it straight up and out of the system, as shown in Figure 8-6.
- Be careful not to kink or damage the flexible EMI gasket that surrounds the inside of the rear chassis wall.
- Place the PCI option board in an anti-static bag, preferably the bag in which the board was originally packaged.

7. Replace the blanking plate.
   - Align the blanking plate and slide it in place, as shown in Figure 8-7.
   - Attach the screw that secures the blanking plate to the Origin200 chassis, as shown in Figure 8-7.

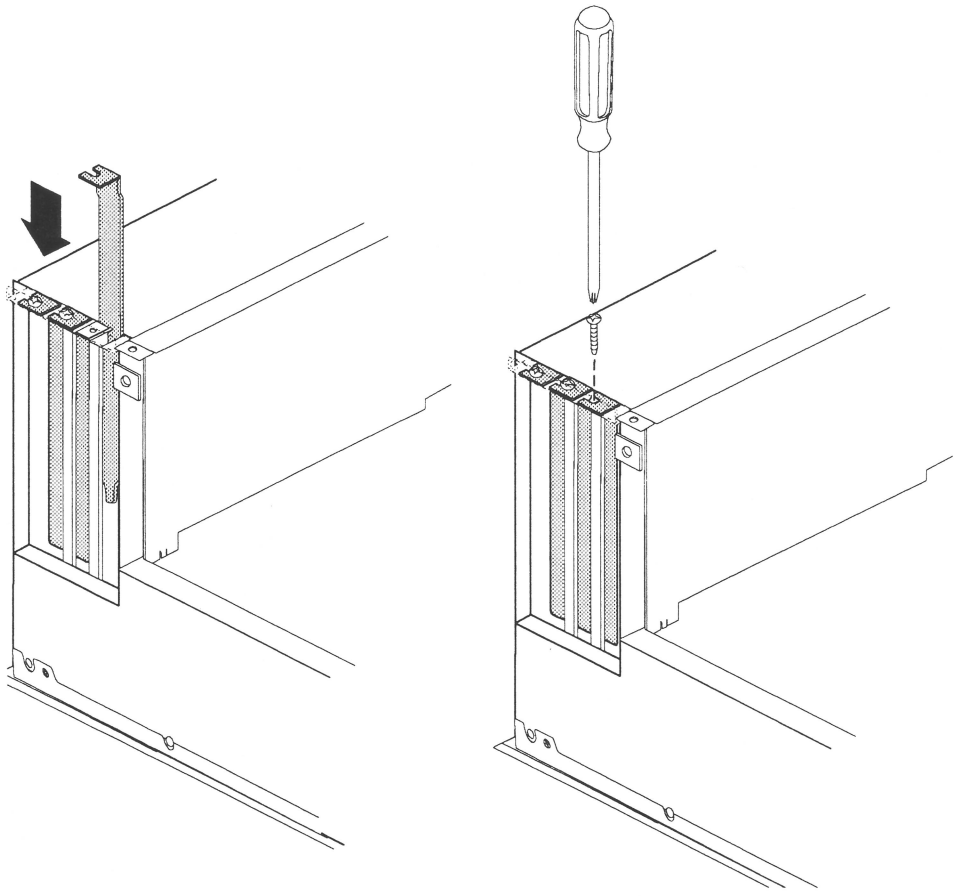

Figure 8-7 Replacing a PCI Option Blanking Plate and Screw

8. After you have replaced the blanking plate, remove your wrist strap and reassemble the system.
   - Replace the chassis access door and side panel (the reverse of removing them).
   - Reattach the cables to the back of the system.

Note: You must replace the blanking plate to cover the gap in the rear of the Origin200 chassis in order to ensure proper airflow through the chassis.

Chapter 9

Installing and Configuring Peripherals

This chapter describes how to install and configure peripherals, including 5.25 inch and 3.5 inch drives and serial devices.

This chapter also directs you to additional documentation about using peripherals with the Origin200 server.

9.1 Installing, Removing, and Configuring 5.25-Inch Peripherals

The following sections describe how to configure, install, and remove peripherals from the 5.25-inch drive bay.

9.1.1 About the 5.25-Inch Peripheral Bay

The 5.25-inch drive bay is located at the top of the Origin200 in a tower configuration, or on the left-hand side in a rack-mount configuration. Figure 9-1 shows the location of the 5.25-inch drive bay.

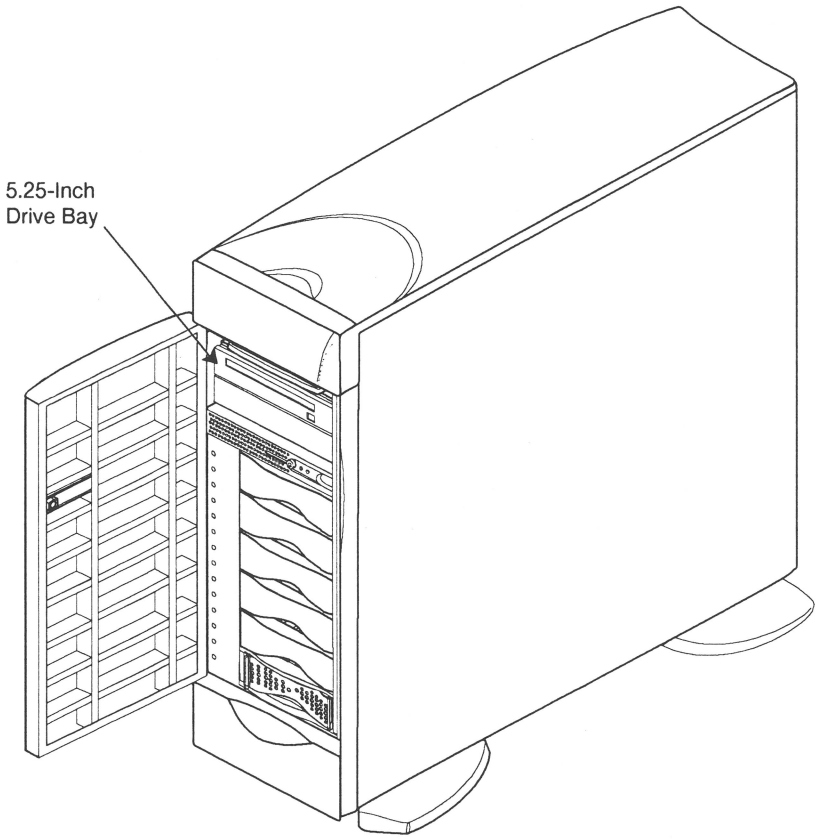

Figure 9-1 Location of the 5.25-Inch Drive Bay

The 5.25-inch drive bay holds a peripheral carrier (mounting frame) to the drives are attached. The carrier is open at the front to accept drives , and has blind-mating connectors at the rear for power and SCSI data. Figure 9-2 shows the mounting frame.

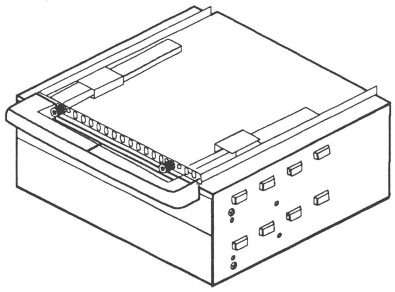

Figure 9-2 5.25-Inch Peripheral Carrier

Drives in the 5.25-inch bay are connected to SCSI channel 1, which is single-ended, fast and narrow, running at 10 MHz, and is capable of transferring 10 MB per second.

The next sections describe how to configure drives, install them in the 5.25-inch drive bay, and how to remove from the drive bay, and how to test that drives are installed correctly.

9.1.2 Configuring a 5.25-Inch Peripheral

Peripherals obtained from Silicon Graphics are pre-configured. You can install them in the 5.25-inch drive bay with no additional configuration.

However, if you are installing third-party peripherals, or wish to change the configuration of a Silicon Graphics-supplied drive, follow these guidelines:

- Set the SCSI ID between 1 and 7. Do not use SCSI ID 0, since that is reserved for the controller.
- Set the drive (motor) start jumper to start on command from the controller. Do not configure the drive to start as soon as power is applied, since this may draw too much current when the system is first turned on.
- Set the drive termination jumper to "off" or remove the drive terminators
- Configure the drive to supply termination power.

SCSI drives are typically formatted by the manufacturer, so no further formatting is necessary. All Silicon Graphics-supplied SCSI drives are pre-formatted.

9.1.3 Installing a 5.25-Inch Peripheral

Follow these steps to install a 5.25-inch peripheral:

1. Remove the peripheral carrier, as shown in Figure 9-3.
   - Pull out the peripheral carrier handle. The handle will flex downward, allowing access to two captive screws.
   - Using a #2 Phillips screwdriver, undo the two captive screws that secure the peripheral carrier to the Origin200 chassis.
   - Grasp the handle of the peripheral carrier and pull the carrier out of the 5.25-inch drive bay.

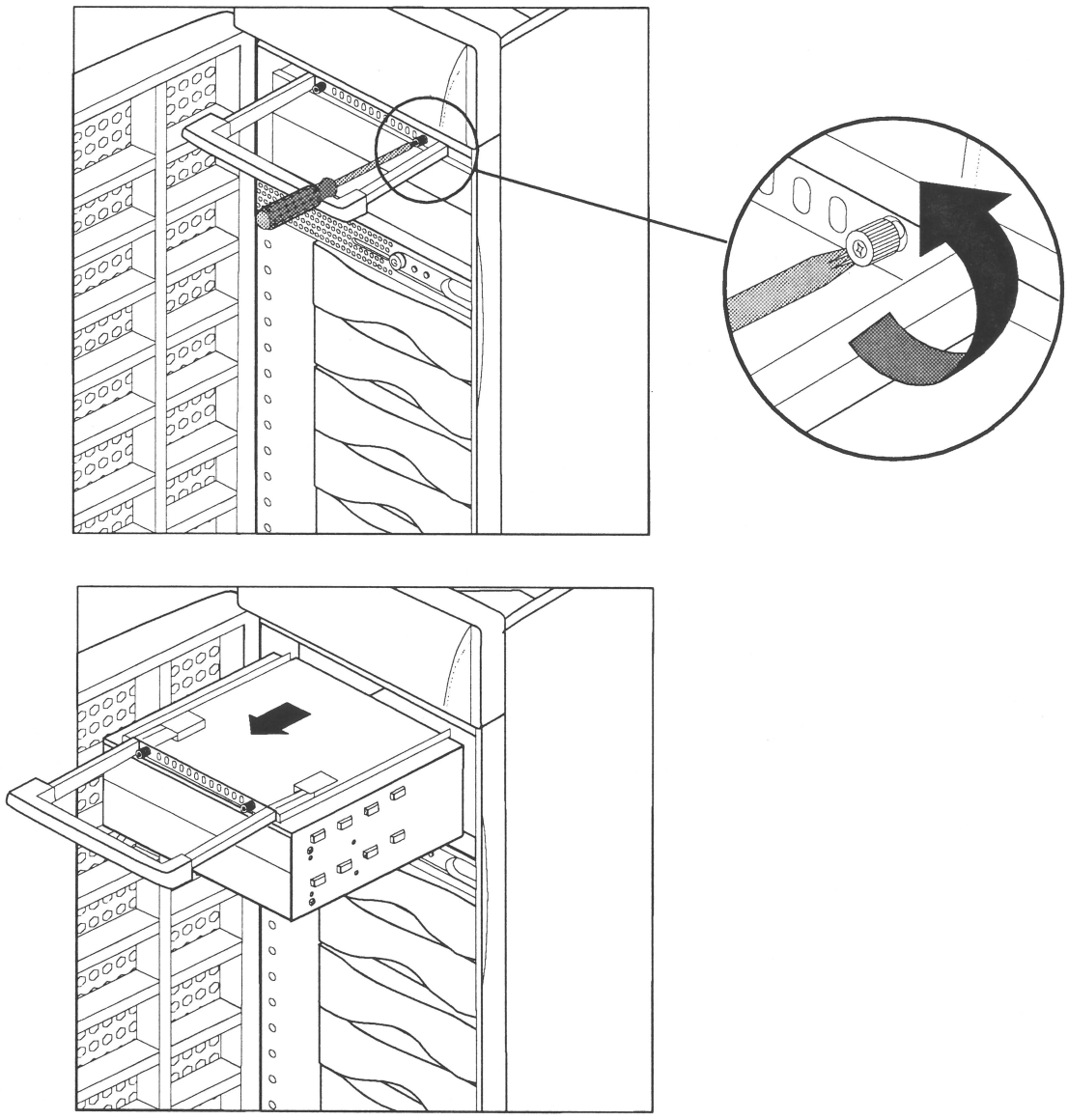

Figure 9-3 Removing the 5.25-Inch Peripheral Carrier

2. Prepare the peripheral carrier, as shown in Figure 9-4.
   - Remove one or two of the blanking plates from the front of the carrier, depending upon whether you are installing a half-height or a full-height peripheral.
   - Using a #2 Phillips screwdriver, remove the screws that hold the access plate to the rear of the carrier, then remove the access plate.

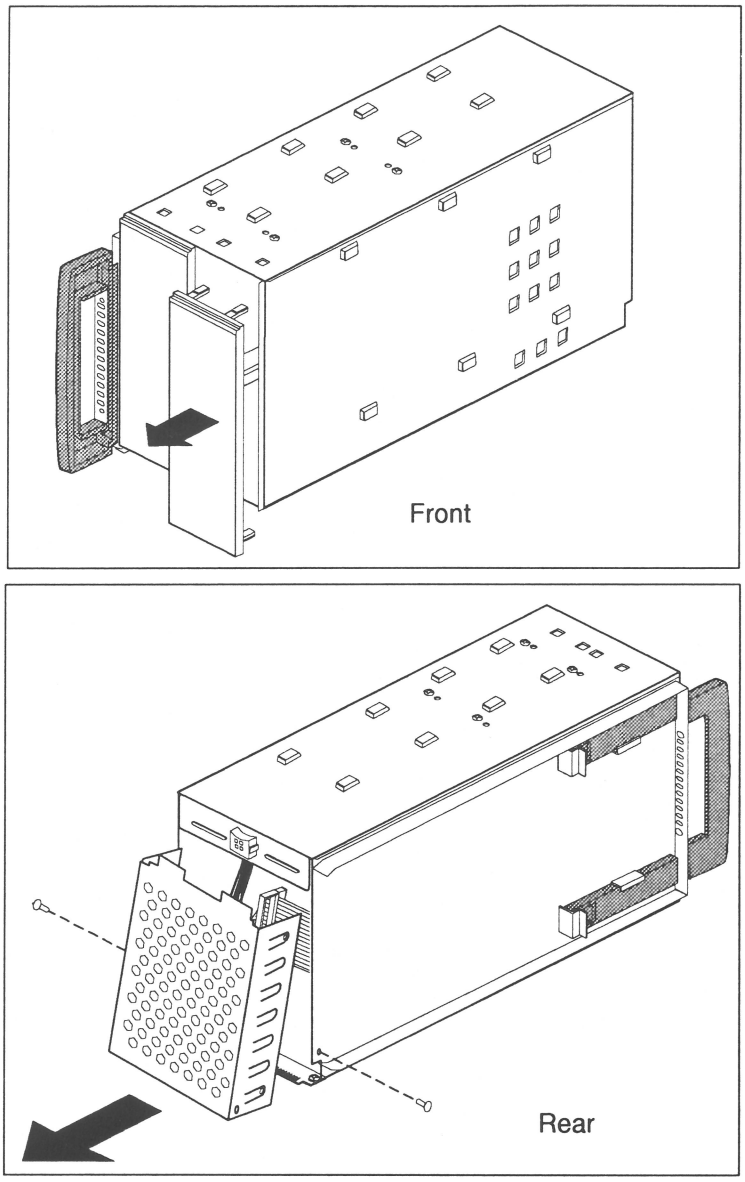

Figure 9-4 Removing a Blanking Plate and the Rear Access Plate from the Peripheral Carrier

3. Slide the drive into the peripheral carrier and attach it with four screws through the side of the carrier, as shown in Figure 9-5.
4. Attach the power and SCSI connectors at the rear of the carrier to the drive. Use whichever connectors fit conveniently for the position of the drive in the carrier.
5. Replace the access plate. See Figure 9-5.

   Note: Be sure to reinstall the access plate on the rear of the carrier. The plate protects the power and SCSI cables from damage when you slide the carrier into the system.

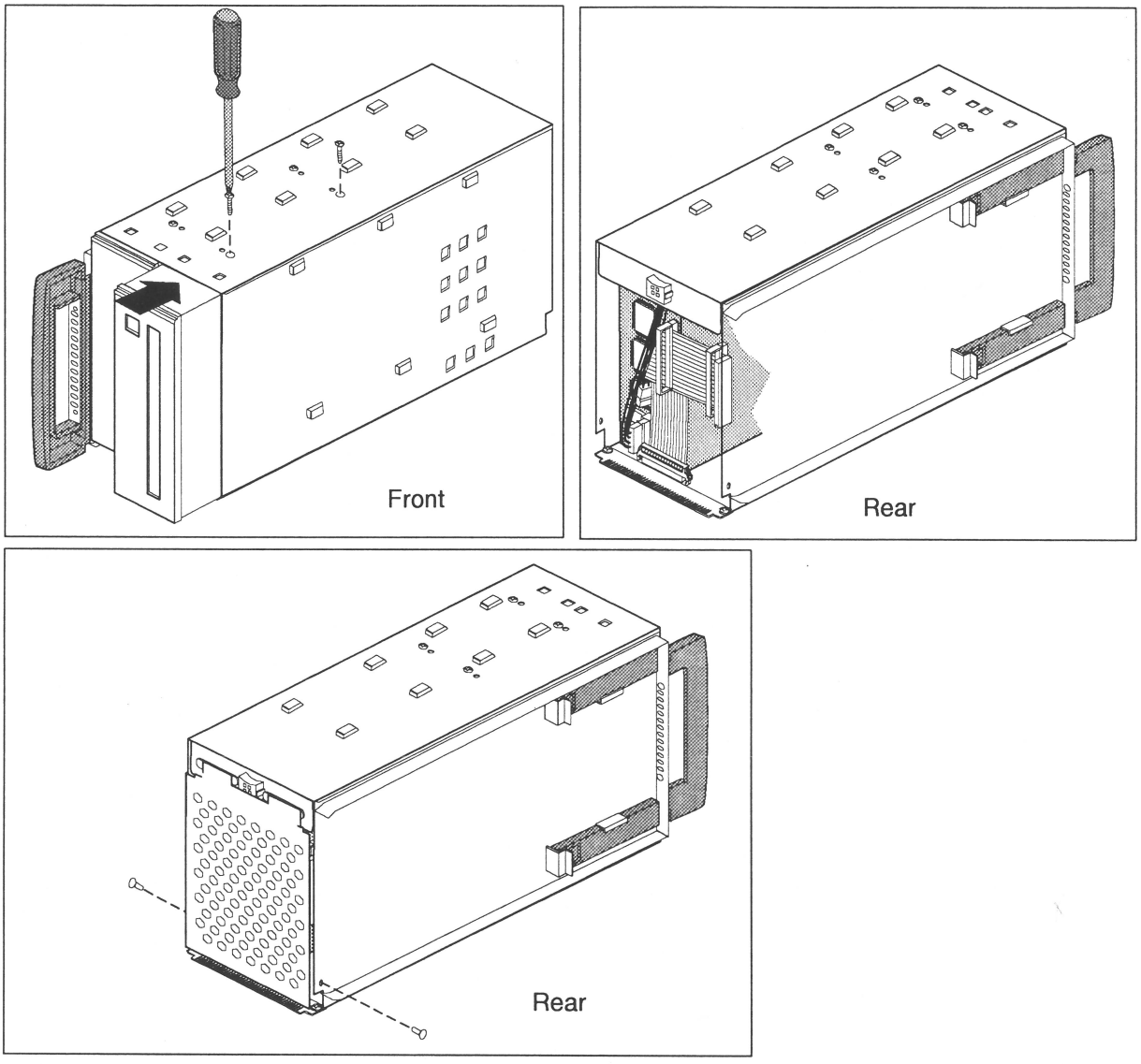

Figure 9-5 Installing a 5.25-Inch Drive in the Peripheral Carrier

6. Slide the carrier into the system and secure it with the two captive screws. See Figure 9-6.

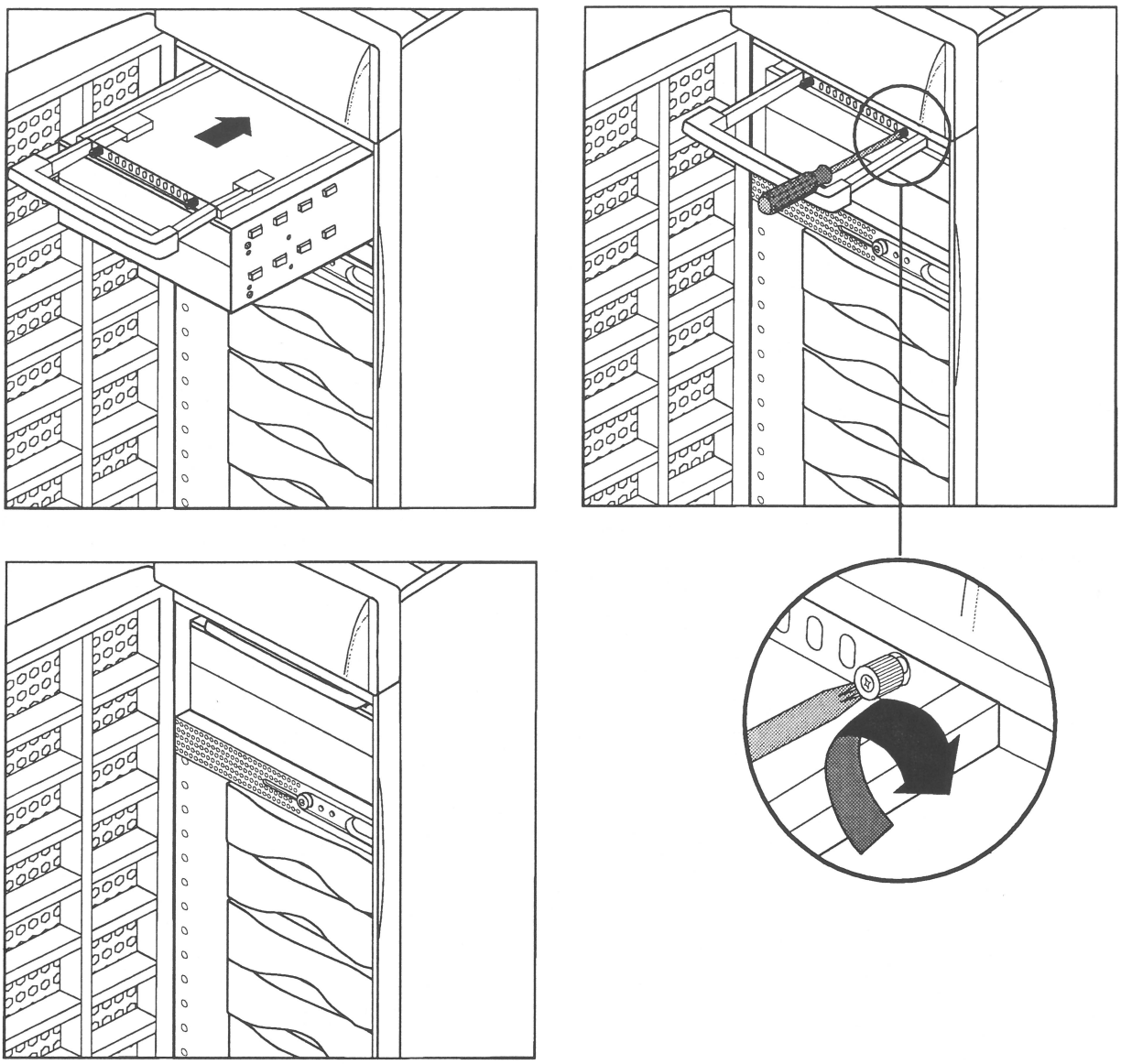

Figure 9-6 Replacing the 5.25-Inch Peripheral Carrier

9.1.4 Removing 5.25-Inch Peripherals

Follow these steps to remove a 5.25-inch peripheral:

1. Remove the peripheral carrier, as shown in Figure 9-7.
   - Pull out the peripheral carrier handle. The handle will flex downward, allowing access to two captive screws.
   - Using a #2 Phillips screwdriver, undo the two captive screws that secure the peripheral carrier to the Origin200 chassis.

- Grasp the handle of the peripheral carrier and pull the carrier out of the 5.25-inch drive bay.

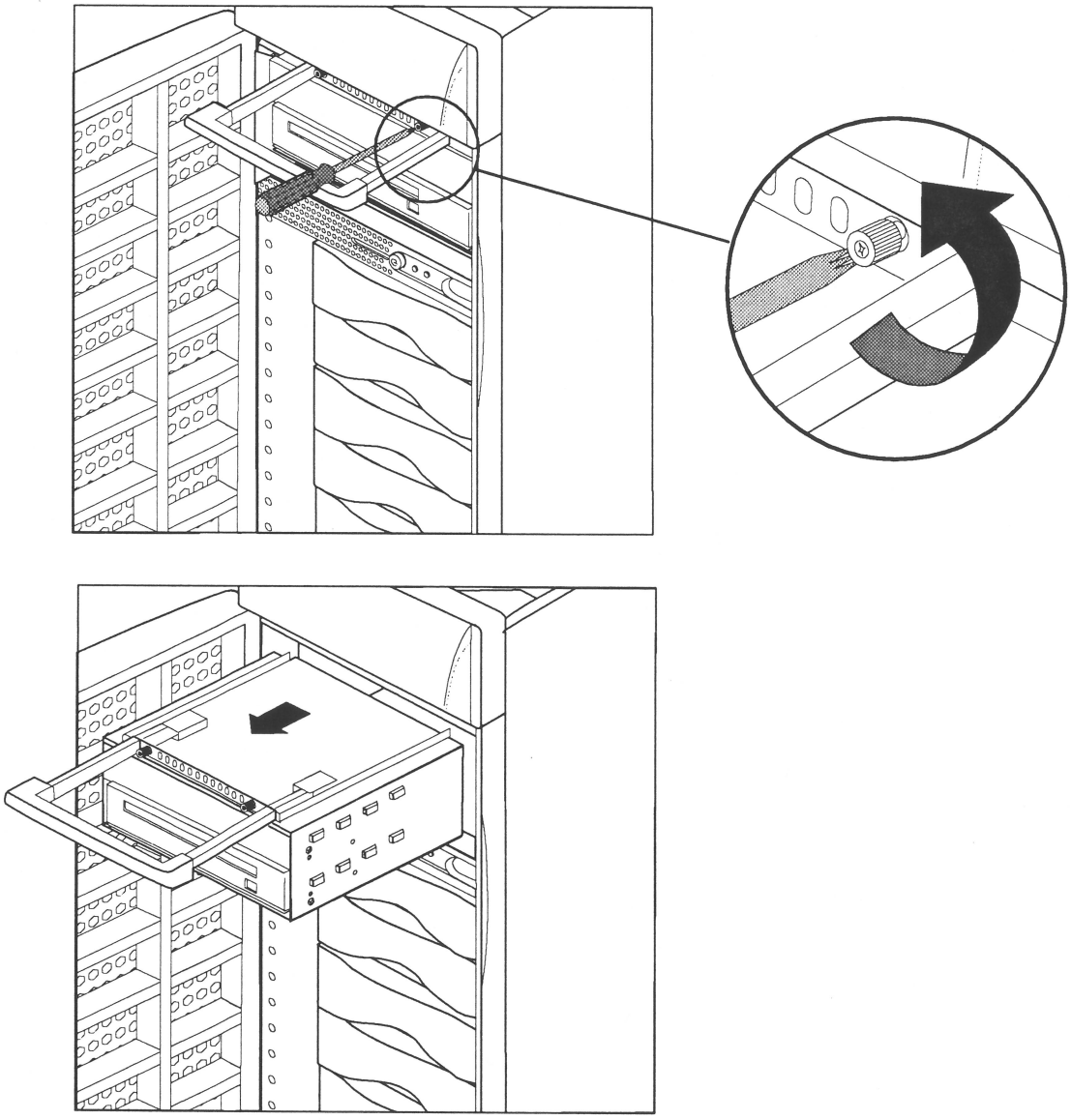

Figure 9-7 Removing the Peripheral Carrier

2. Remove the rear access plate from the peripheral carrier, as shown in Figure 9-8.
    - Using a #2 Phillips screwdriver, remove the screws that hold the access plate to the rear of the carrier, then remove the access plate.

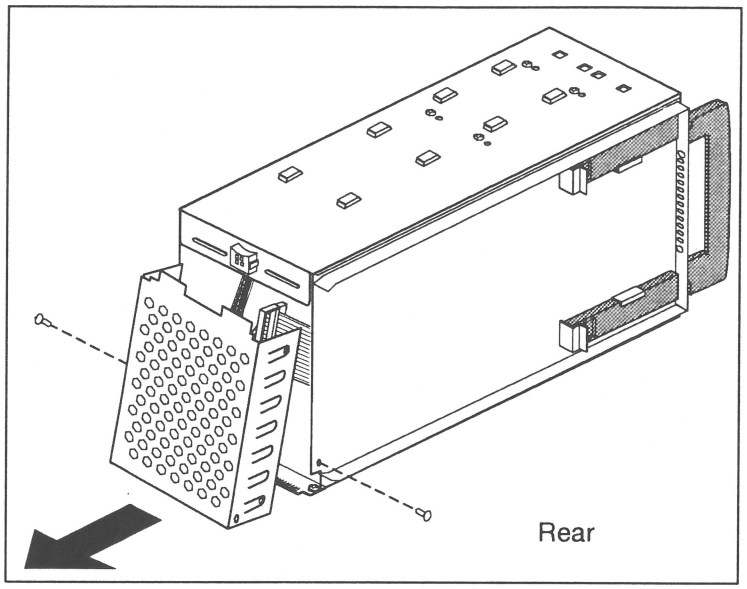

Figure 9-8 Removing the Rear Access Plate from the Peripheral Carrier

3. Disconnect the power and SCSI cables from the drive.
4. Remove the screws that hold the drive to the peripheral carrier and remove the drive from the carrier, as shown in Figure 9-9.

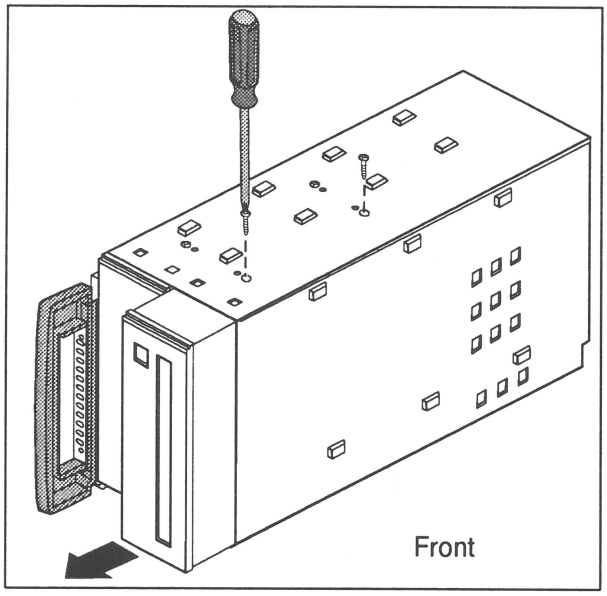

Figure 9-9 Removing A Drive From the Peripheral Carrier

5. Replace the blanking and access plates on the peripheral carrier. See Figure 9-10.
    - The front blanking plate ensures proper airflow through the system.

- The rear access plate protects the cables in the peripheral carrier from damage when installing and removing the carrier.

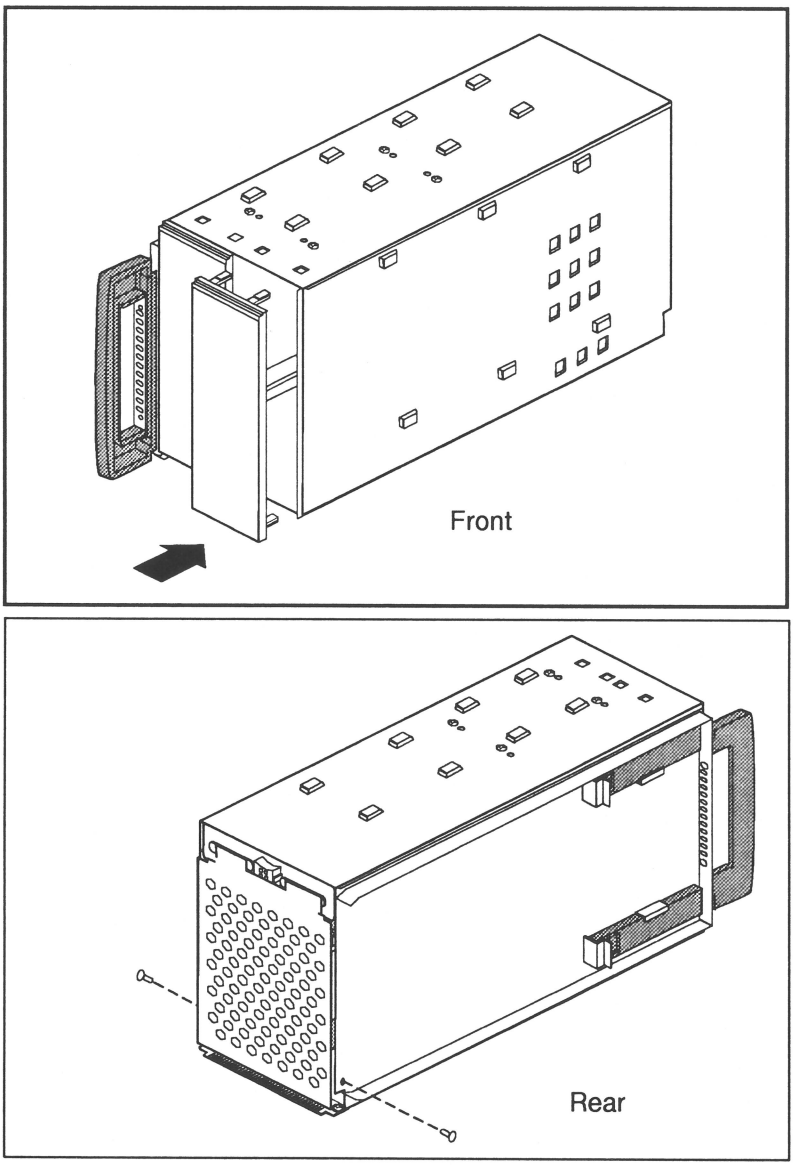

Figure 9-10 Replacing the Front Blanking Plate and Rear Access Plate

6. Slide the carrier into the system and secure it with the two captive screws. See Figure 9-11.

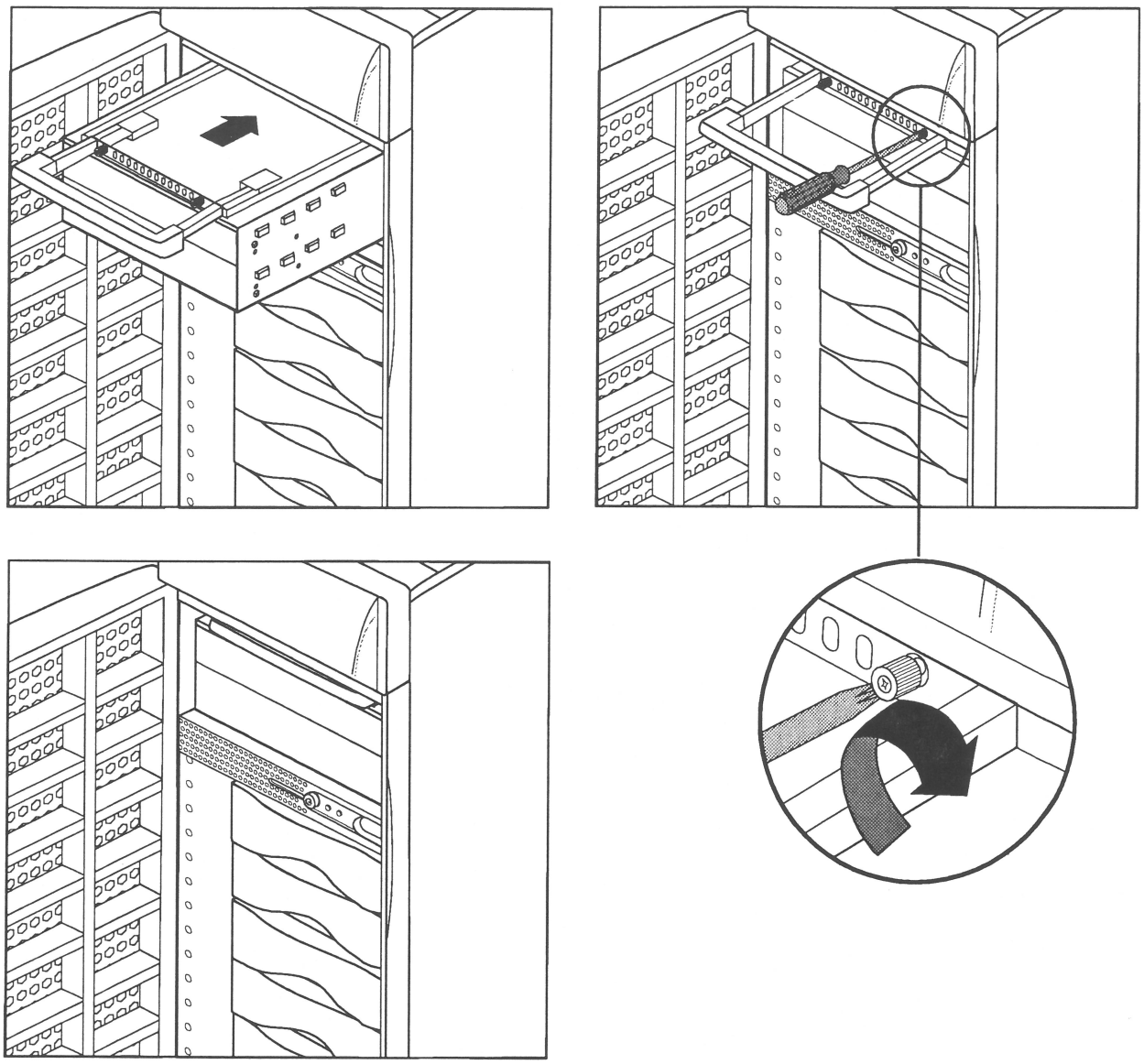

Figure 9-11 Replacing the 5.25-Inch Peripheral Carrier

9.2 Installing, Removing, and Configuring 3.5-Inch Peripherals

The Origin200 chassis has room for six 3.5-inch peripherals. Each peripheral is mounted on a sled to make it convenient to install and remove the peripherals, and set their SCSI ID numbers.

The next sections describe how to configure, install, and remove 3.5-inch peripherals.

9.2.1 About the 3.5-Inch Peripheral Bay

The 3.5-inch peripheral bay holds up to six drives mounted on sleds. The SCSI ID of each drive is determined by the slot into which it is installed. The system (boot) disk must be installed in slot 1. Figure 9-12 shows how the slots correspond to SCSI IDs.

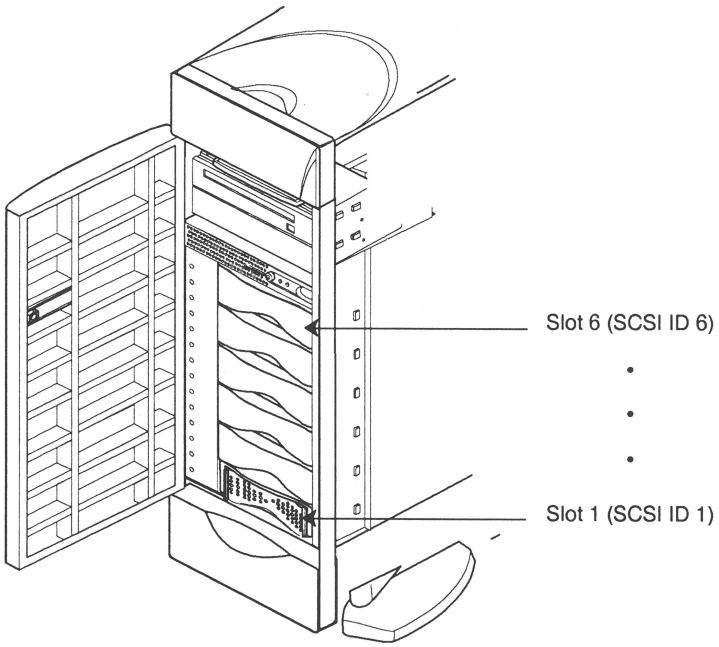

Figure 9-12 The 3.5-Inch Drive Bay and Correspondence of SCSI IDs to Drive Slots

Drive bays that do not contain peripherals are filled by blanking plates. Figure 9-13 shows a blanking plate for the 3.5-inch drive bay. These plates provide for proper airflow through the system as well as EMI shielding.

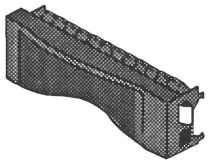

Figure 9-13 Example 3.5-Inch Drive Slot Blanking Plate

9.2.2 Configuring 3.5-Inch Peripherals

3.5-inch peripherals obtained from Silicon Graphics are pre-configured and installed on drive sleds. You can install them in the 5.25-inch drive bay with no additional configuration.

9.2.3 Installing a 3.5-Inch Peripheral

Follow these steps to install a 3.5-inch peripheral:

1. Open the front door of the chassis as shown in Figure 9-14.

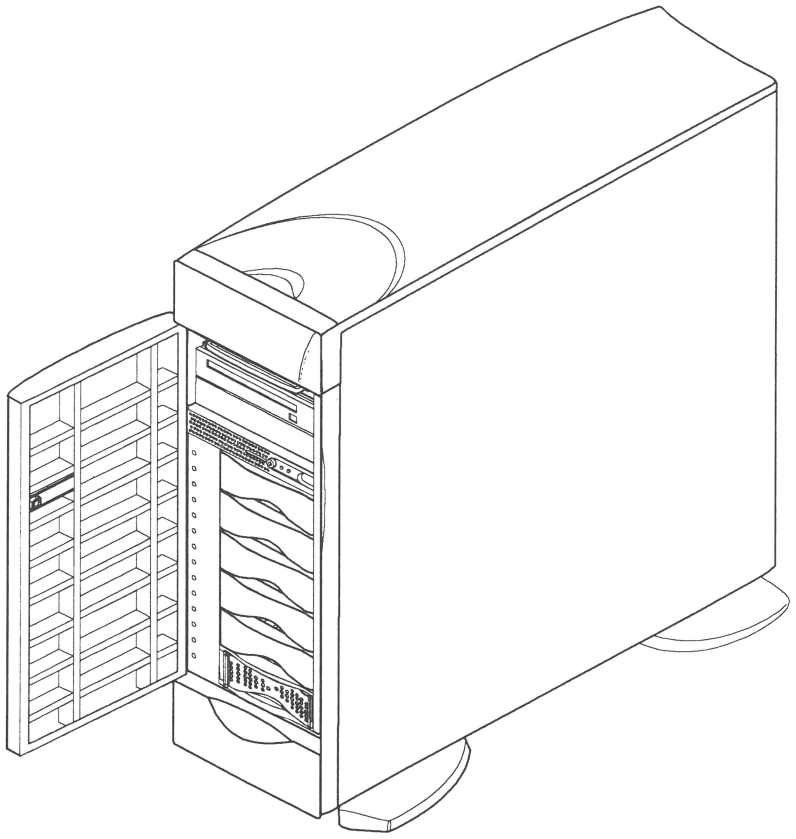

Figure 9-14 Opening the Front Door of Origin200

2. Locate an available slot for the peripheral.
   - Figure 9-15 shows how the drives are numbered.

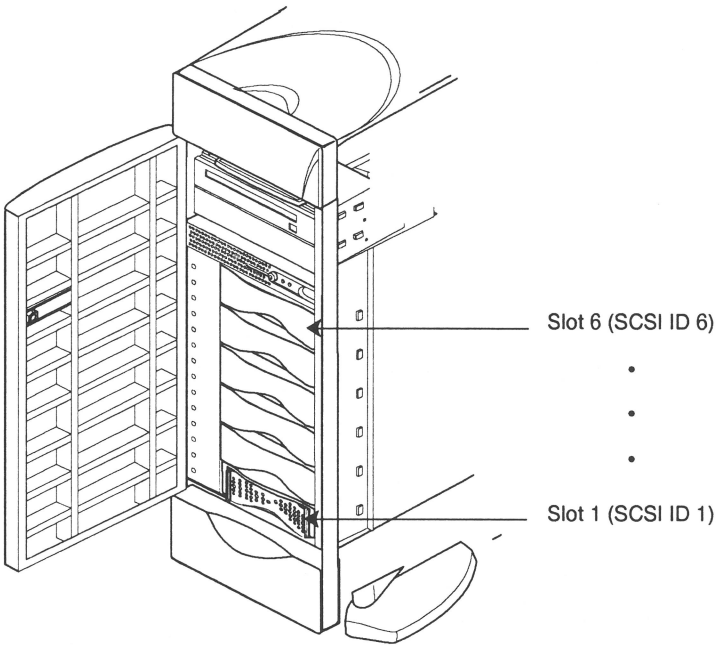

Figure 9-15 How the 3.5-inch Drives are Numbered in Origin200

If desired, you change the range of 3.5-inch SCSI drive IDs to 9 through 14 using a jumper on the SCSI backplane. See "Jumpering the 3.5-Inch SCSI Device ID Range" in Chapter 4.

3. Install the peripheral.
    - If there is a plastic blanking plate covering the slot, remove it as shown in Figure 9-16.
    - Slide the drive forward until it is almost flush with the edge of the drive bay.
    - Fold the locking lever up to latch the drive in place, as shown in Figure 9-16.

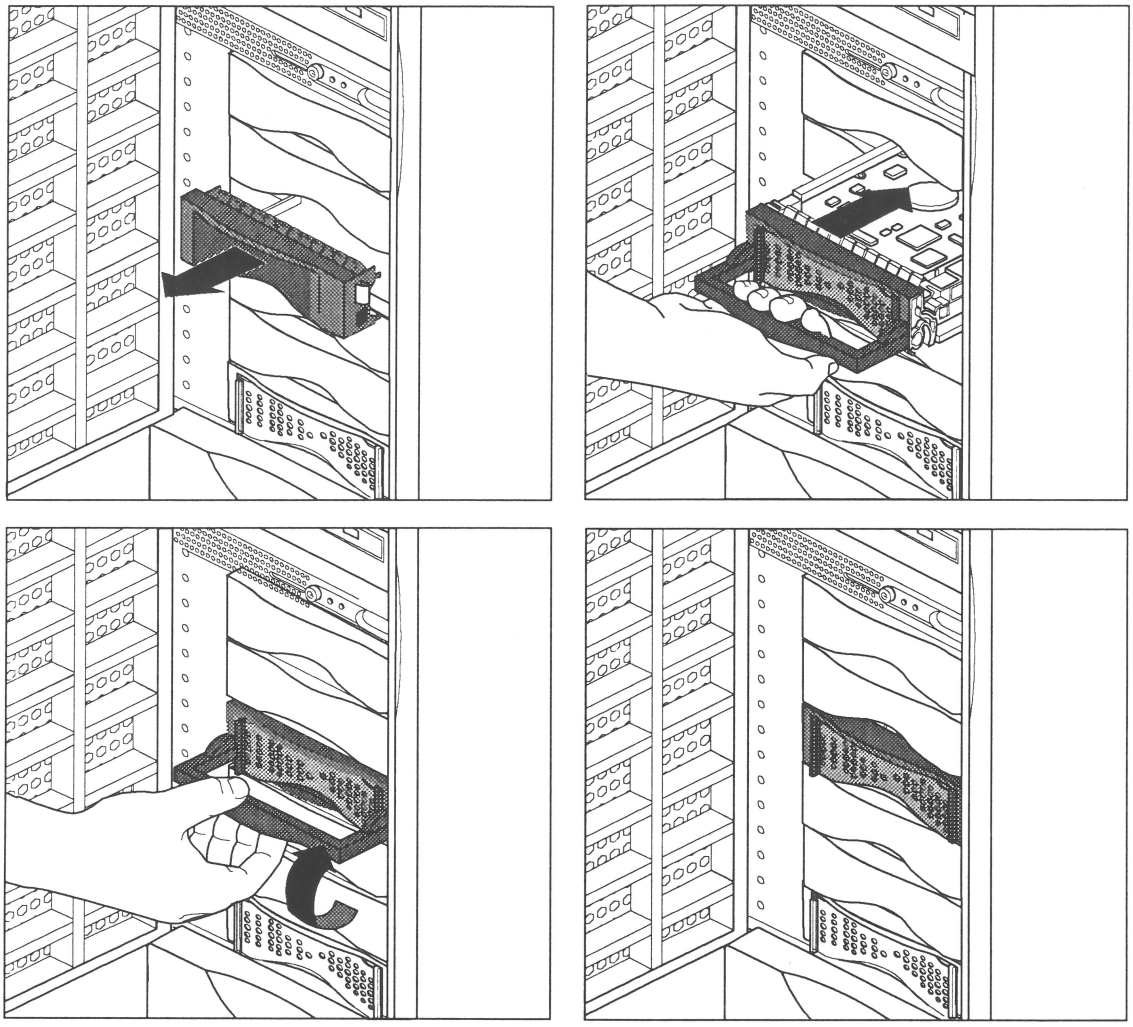

Figure 9-16 Installing a 3.5-inch Peripheral

Note: The customer should save the blanking plates you remove. If the peripheral is ever removed and not replaced, the blanking plate should be reinstalled plate to ensure proper cooling air flow and electromagnetic interference (EMI) shielding in the chassis.

9.2.4 Removing a 3.5-Inch Peripheral

Follow these steps to remove a 3.5-inch peripheral:

1. Open the front door of the chassis, as shown in Figure 9-17.

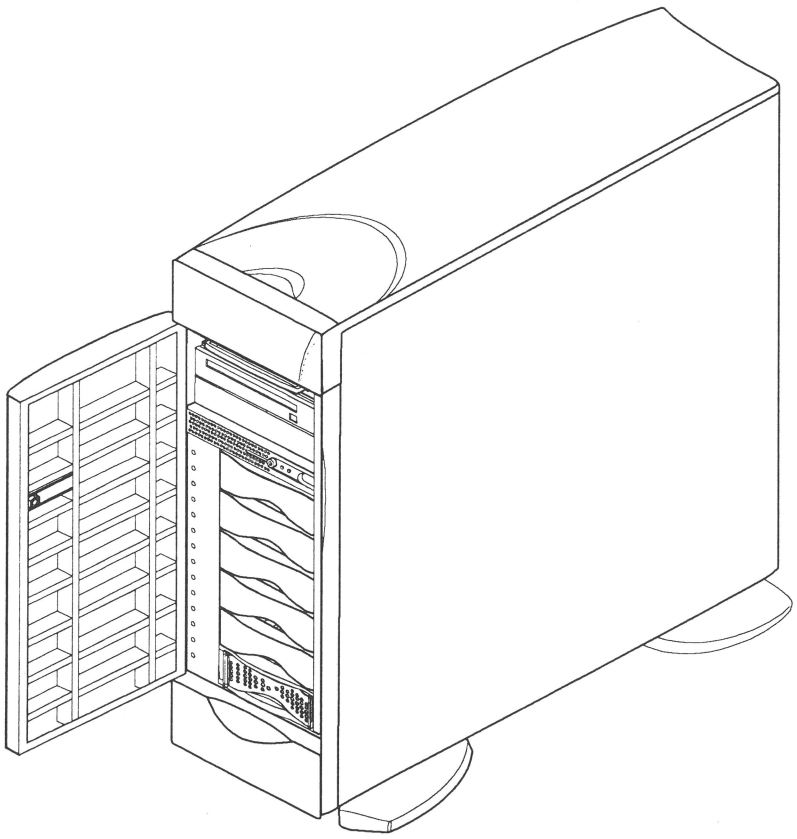

Figure 9-17 Opening the Front Door

2. Locate the drive you want to remove.
   - The drives are numbered as shown in Figure 9-18.

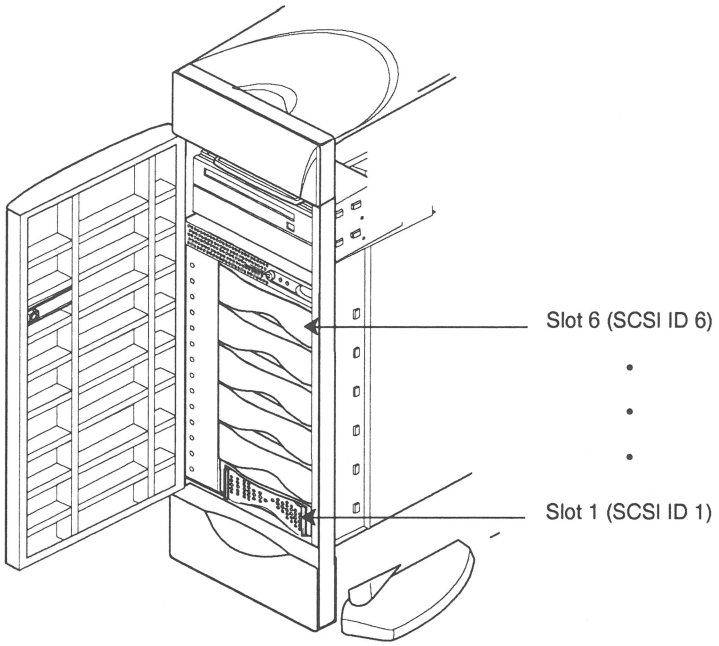

Figure 9-18 How the 3.5-inch Drives are Numbered

3. Remove the drive, as shown in Figure 9-19.
   - Pull the locking lever down.
   - Grasp the lever and pull the drive straight out of the chassis.

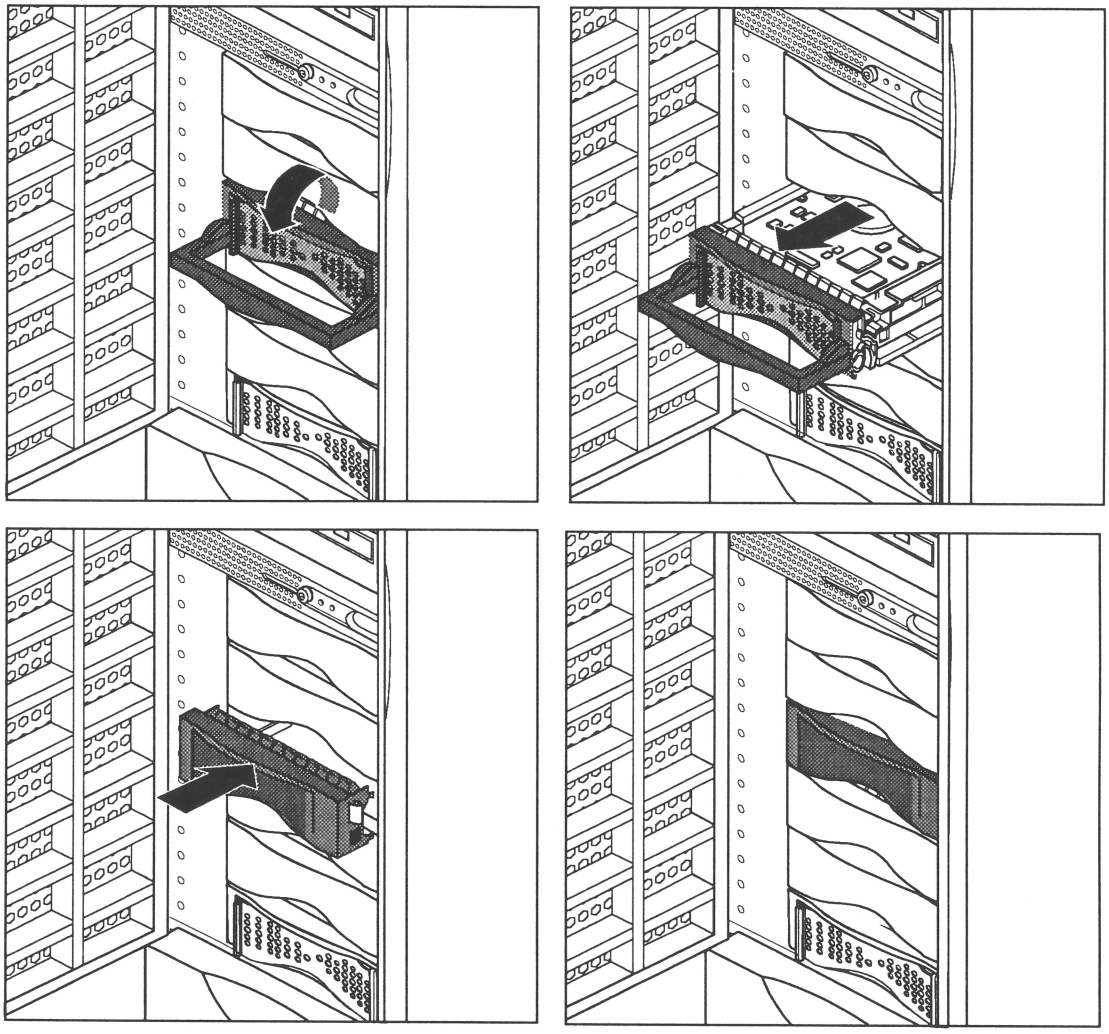

Figure 9-19 Removing a 3.5-inch Drive from Origin200

4. If you are not replacing the drive with another peripheral, cover the open slot with a plastic blanking plate, as shown in Figure 9-19.

Note: Always cover an open peripheral slot with a plastic blanking plate to ensure proper cooling air flow and electromagnetic interference (EMI) shielding in the chassis.

9.3 Verifying That A Drive Is Installed Correctly

Use the following checklist to determine if a drive is installed correctly:

- Power on the system and watch drive lights. Drives should blink as they are accessed sequentially from drive 1 at the bottom of the 3.5-inch drive bay (right-hand side in a rack-mounted server) up to the top drive in the 5.25-inch peripheral carrier.

- Check the system console; drives that are malfunctioning will cause the operating system to print an error message on the system console as the system boots.
- When the system boots (either single-user mode, or multiuser mode), use *hinv* to see what drives the system recognizes. Log in to the system using any account (root, guest, etc.) and at a shell prompt type:

  ```
  hinv -c disk
  ```

  You should see messages similar to this:

  ```
  Integral SCSI controller 0: Version QL1040B
    Disk drive: unit 1 on SCSI controller 0
    Disk drive: unit 3 on SCSI controller 0
  Integral SCSI controller 1: Version QL1040B
  Integral SCSI controller 4: Version QL1040B
    Disk drive: unit 1 on SCSI controller 4
    Disk drive: unit 2 on SCSI controller 4
  Integral SCSI controller 5: Version QL1040B
  ```

  This indicates the system recognizes two disk drives on SCSI channel 0 (the system drive in slot 1 and a second drive installed in slot 3) and no drives on channel 1. The second module of this system also had two drives installed on channel 0 (in slots 1 and 2) and no drives installed in channel 1.

9.4 Using Drives In the Origin200

Once installed, Silicon Graphics-provided peripherals are all recognized by the operating system (IRIX) and are ready to be configured for use with the system. Table 9-1 indicates where to turn for more information about configuring drives, depending upon how you want to use the drives in your system (for example, as mounted filesystems, logical volumes spanning multiple disks, striped across multiple disks, EFS filesystems, XFS filesystems, and so forth).

In addition to the reference pages described in Table 9-1 below, refer to the manual *IRIX Admin: Disks and Filesystems*. See the chapter "About This Guide" for information about obtaining additional manuals and documentation.

Table 9-1 Sources Of Information For Drive Configuration

Type of Configuration/Operation	Reference (Man) Pages or Commands
Changing controller numbers	ioconfig(1M)
Device Files, Creating	MAKEDEV(1M)
Disks, Formatting and Initializing	fx(1M)
Disks, Files In the Volume Header, Adding and Removing	dvhtool(1M)
Disks, Displaying Partitions	prtvtoc(1M) fx(1M)

Table 9-1 Sources Of Information For Drive Configuration

Type of Configuration/Operation	Reference (Man) Pages or Commands
Disks, Repartitioning	fx(1M) The xdkm graphical tool
Disks, Creating a System (Boot) Disk	PROM monitor (from the System Maintenance Menu) fx(1M), mkfs(1M), MAKEDEV(1M) dump(1M), xfsdump(1M)
Disks, Adding as a Mounted Filesystem	Add_disk(1)
Disks, Use Quotas	quota(1)
Filesystem, Creating an EFS or XFS	mkfs(1M)
Filesystem, Spanning Across Multiple Disks	xlv(7M)
Filesystems, Mounting and Unmounting	mount(1M), umount(1M) fstab(4)
Filesystems, Automatically Mounting (automount)	automount(1M) exports(4) chkconfig(1M)

9.5 Attaching Serial Devices

Each Origin200 module provides connectors for two serial ports at the rear of the chassis. Figure 9-20 shows the locations of the connectors for these ports.

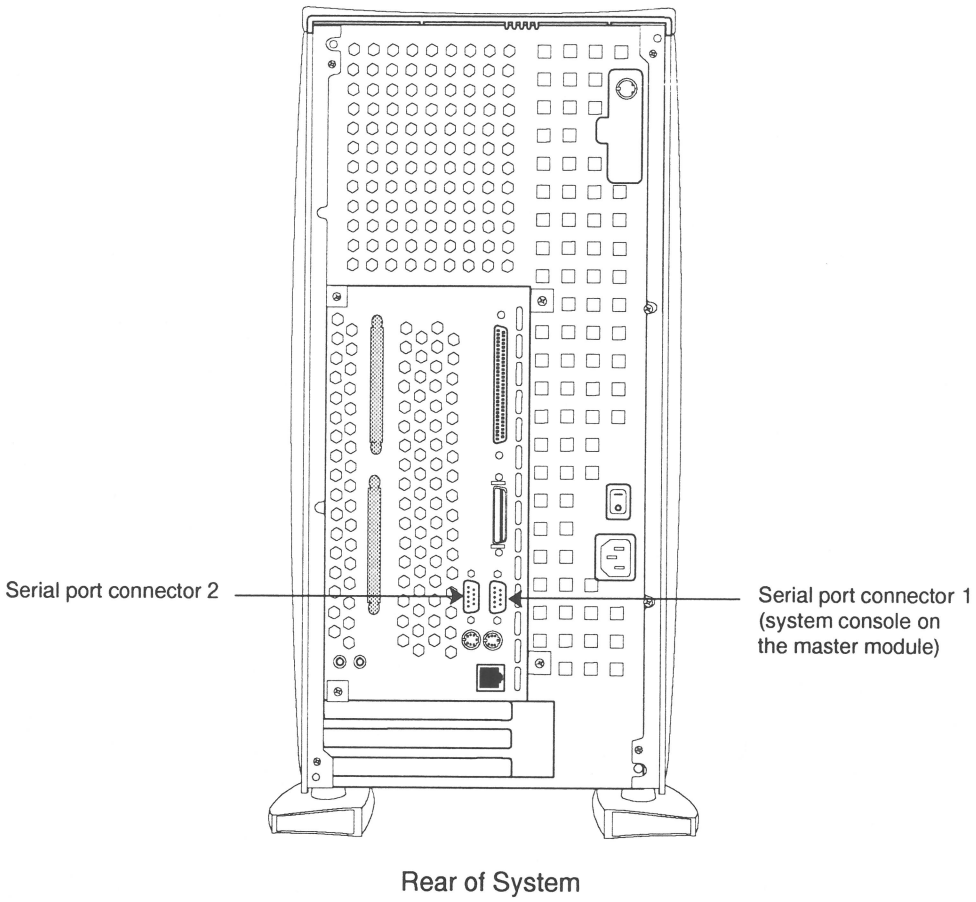

Figure 9-20 Location of the Serial Port Connectors on Origin200

In a one-module system, the ports are numbered 1 and 2. In a two-module system, the ports on the first module are numbered 1 and 2, and the ports on the second module are numbered 3 and 4. See "How Devices are Detected and Numbered" in Chapter 6.

Common types of serial devices you can attach to these ports are:

- serial (ASCII) terminals
- modems
- printers
- other computers (using terminal emulation or other serial protocols)

The serial ports are capable of transferring data at speeds ranging from 50 baud to 460 Kbaud. The default serial port configuration is RS-232, but the serial ports can be opened programmatically in RS-422 mode. The serial ports can also be used to send and receive *MIDI* information.

Like those found on the O2 and the rest of the Origin product line, the serial port connectors are DB-9, male, and are designed to be IBM-compatible. Because of this, they do not use the same pinouts as prior Silicon Graphics DB-9 serial ports.

Table 9-2 shows the correspondence of ports to IRIX device files and protocols.

Table 9-2 Serial Port Numbers and Correspondence to IRIX Device Files

Serial Port Number	IRIX Device File (RS-232 Mode)	IRIX Device File (RS-422 Mode)	IRIX Device File (MIDI Mode)
First module:			
1 (system console)	*/dev/tty[c,d,f,m]1*	*/dev/tty4[d,f,m]1*	*/dev/ttymidi1*
2	*/dev/tty[c,d,f,m]2*	*/dev/tty4[d,f,m]2*	*/dev/ttymidi2*
Second module:			
3	*/dev/tty[c,d,f,m]3*	*/dev/tty4[d,f,m]3*	*/dev/ttymidi3*
4	*/dev/tty[c,d,f,m]4*	*/dev/tty4[d,f,m]4*	*/dev/ttymidi4*

Note: For more information on how devices are detected and configured, see "How Devices are Detected and Numbered" in Chapter 6.

For serial port pinouts, see Appendix A, "Connector Pinout Assignments." For information on specific serial cables, see Appendix B, "Cable Descriptions."

9.5.1 Attaching Serial Cables

The serial port connectors are D-shell, 9-pin, male. Use a a cable with a DB-9 female connector to attach serial devices to the Origin200 server. The Origin200 serial port connectors provide threaded hex-nuts so that you can fasten the cable connector to the port.

9.5.2 Attaching Serial (ASCII) Terminals

You can connect an optional ASCII terminal to your Origin200 by using the serial cable shipped with your server. It has a DB-9 connector on one end and a 25-pin serial connector on the other. See Appendix B, "Cable Descriptions" for information on this cable.

Be sure to read the documentation that comes with the terminal. Always connect your system console terminal to serial port 1. You can connect an additional terminal to ports 2, 3, and 4. Set the terminal with the following operational characteristics:

- 9600 baud
- 8 bits
- 1 stop bit
- no parity

Use the following steps to properly connect a terminal:

1. Attach the keyboard (if applicable) and power connectors to the terminal.

   Caution: Before plugging the terminal into either a 110-VAC or 220-VAC outlet, be sure that the electrical rating on the UL-CSA label is in either the 100–120 VAC or 200–240 VAC range, whichever applies.

2. Connect the end of the serial cable that has the 25-pin connector to the back of the terminal. (Some terminals have more than connector on the back; if this is the case, choose the connector marked Modem or COMM. Consult your terminal's documentation if you are not sure which connector to use.)

3. Attach the end of the serial cable that has the DB-9 connector to either port 1 (if the terminal will be the system console) or one of the other ports.

4. Power on the terminal.

5. Restart the system or continue with other peripheral connections as needed.

In some cases the terminal may need special recognition from the system software. You can check or set up the system software to work under specific parameters by using the following:

1. Log in to the system as root.

2. Edit the file */etc/gettydefs* to choose the proper baud rate, prompt, and line conditioning.

   ```
   vi /etc/gettydefs
   ```

3. Modify the file */etc/inittab*, if necessary, to enable *getty* on the appropriate port at the desired baud rate. Enter

   ```
   vi /etc/inittab
   ```

   The following lines are for the system console and the second serial port:

   ```
   t1:23:respawn:/etc/getty ttyd1 co_9600          # alt console
   t2:23:off:/sbin/getty -N ttyd2 co_9600          # port 2
   ```

   These lines are for ports 3and 4on a second module:

   ```
   t5:23:off:/sbin/getty -N ttyd3 co_9600          # port 3
   t6:23:off:/sbin/getty -N ttyd4 co_9600          # port 4
   ```

   Notice that ports 2, 3, and 4are marked "off." This means that you cannot log in on those ports. To allow logging in on, for example, port 3 change the line for port 3 to the following:

   t5:23:respawn:/sbin/getty -N ttyd3 co_9600 # port 3

   If you want to use a higher baud rate, for example, 38400, change the line to the following:

   t5:23:respawn:/sbin/getty -N ttyd3 dx_38400 # port 3

4. After modifying the */etc/inittab* file, inform *init* of any changes by entering

   ```
   telinit q
   ```

5. Look in */etc/ttytype* for the listed console port information. You should see lines similar to this:

```
?iris-tp console
iris-tp tport
?vt100 ttyd1
?vt100 ttym1
?vt100 ttyf1
?vt100 ttyd2
?vt100 ttym2
?vt100 ttyf2
?vt100 ttyd3
?vt100 ttym3
?vt100 ttyf3
...
```

6. The default terminal type for all terminals is vt100 and the system prompts you to confirm this. To keep the system from asking you what type of terminal you are using when you log in, remove the question marks from all lines in the file that correspond to the serial port 1, 2, 3, and 4). For example, to prevent the system from prompting for a terminal type on port 3, you would change these lines in */etc/ttytype*:

```
...
vt100 ttyd3
vt100 ttym3
vt100 ttyf3
...
```

   You can also change the terminal type that designated for the particular serial port by changing "vt100" to another shorthand terminal name.

7. Add the following line to your *~/.login* or *~/.profile* file. This sets the terminal type, syntax, erase, and kill parameters automatically when you log in:

```
eval 'tset -s -Q'
```

8. Check terminal connection and function using the following commands:

```
echo Hello, this is a test > /dev/ttyd3
```

   This command should cause the sentence "Hello, this is a test" to appear on the terminal attached to port 3. If nothing appears on the terminal, check that you are using the correct serial port and that the terminal is configured correctly. If gibberish appears on the terminal screen, it probably means the terminal is not set to the same baud rate as the serial port.

   If the test sentence appears on the terminal screen, but you do not see a "login:" prompt when you press the terminal's <Enter> key, verify that there is a *getty* process running on the serial port.

```
ps -def | grep getty
```

   You should see output similar to this:

```
root  844  1  0 23:16:27 ttyd3 0:00 /sbin/getty -N ttyd3 dx_38400
root  843  1  0 23:16:27 ttyd1   0:00 /sbin/getty ttyd1 co_9600
```

   This indicates that a getty process is running on both the system console (port 1) and on port 3. If you do not see a *getty* process running on the desired serial port, verify the serial port settings in */etc/inittab* and rerun *telinit*.

9.5.3 Connecting a Modem

To attach a modem to your server, connect it to ports 2, 3, or 4using a serial modem cable. The serial cable must be appropriate for data communications equipment (DCE): the data transmit and data receive pins are opposite those in a DTE cable. Also, the cable must provide full flow control. See Appendix B, "Cable Descriptions" for information about this type of cable.

See the */etc/uucp/fix-hayes* or */etc/uucp/fix-telebit* files for information on specific modems supported, (see step 5, below).

The following general procedures are used when connecting a modem:

1. Make sure that the power switch on the modem is turned off.
2. Attach the serial cable to the modem.
3. Attach the connector on the other end of the cable to the desired serial connector on the server's I/O panel (port 2 in a single-module system, or ports 2, 3, or 4in a dual-module system).
4. Attach the modem power cord and turn on the modem.
5. Install the UUCP subsystem (*eoe.sw.uucp*), if it is not already installed.

   Note: The UUCP subsystem is shipped with the IRIX operating system, but is not installed by default. Confirm that the UUCP subsystem installed by using the versions(1M) command. If it is not installed, see *IRIX Admin: Software Installation and Licensing* for instructions.
6. Read the documentation that comes with your modem to determine model-specific connection and configuration procedures.

For additional information about configuring modems, see *IRIX Admin: Peripheral Devices*. You may need to modify entries in the files */etc/inittab* and */etc/uucp/Devices*.

Additional useful information on modem operation and configuration is available on the cu(1) reference page.

9.5.4 Useful Serial Commands

To show the standard settings on a particular serial port, become superuser and enter

```
stty < /dev/ttydx
```

Where *x* is the number of the tty port on which you want information (for example, 1, 2, 3, and 4).

To show the various settings on a particular serial port, enter

```
stty -a < /dev/ttydx
```

To change the baud rate (the example is 2400) on a particular serial port, enter

```
stty 2400 < /dev/ttydx
```

For additional useful information on serial ports and configuration, see the reference (man) pages for the following:

- *cu*
- *inittab*
- *gettydefs*
- *ttytype*
- *terminfo*
- *stty*
- *termio*

The following files are commonly used to properly configure serial port operation for the Origin200 server:

- */etc/inittab*
- */etc/gettydefs*
- */etc/ttytype*
- */usr/lib/terminfo*
- */etc/uucp/Devices*
- */etc/uucp/Systems*

Chapter 10

Troubleshooting

This chapter the various LEDs that are on the Origin200 server. It also describes how to check the power supply of the Origin200 server and Origin Vault expansion option.

10.1 Status LED Messages

The status LED on Origin200 server front panel can display three colors: green, amber, red. Table 10-1 lists the various messages displayed by the status LED.

Table 10-1 Status LED Messages

LED Code	Meaning
Red briefly, then amber, then green, then off (about 1/2 second per color)	If you have just turned on the master power switch, this indicates the system controller is OK.
Green, blinking	The system is booting.
Green on solid	System is on.
Amber, blinking	Normal power down sequence.
Amber on solid	One of the fans has failed.
Red, blinking (during power down sequence)	A problem with the power supply was detected. Check the power supply using the test method described in "Checking the Power Supply."
Red, blinking (followed by system shutdown)	Two possible problems: single fan failure combined with over temperature, or multiple fan failure. Use the AUX port to query the module system controller. See "Using the AUX Port and Module System Controller Commands" in Chapter 6.
Red on solid (followed by system shutdown)	Two possible problems: the power supply failed during booting (check the power supply using the test method described in Section 10.3), or the system became too hot (see "Using the AUX Port and Module System Controller Commands" in Chapter 6 to check the system temperature).

10.2 Ethernet Status LED Messages

The Ethernet 10-Base-T/100-Base-TX port contains two integral LEDs, the transmit LED (green) and the packet detect LED (yellow). Figure 10-1 shows their locations.

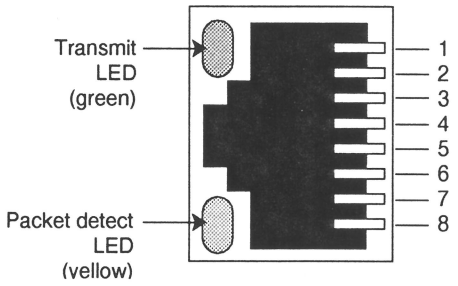

Figure 10-1 Ethernet 10-Base-T/100-Base-TX Port LEDs

The transmit LED (green) flashes whenever the Origin200 is transmitting data through the Ethernet port.

The packet detect LED (yellow) flashes whenever the server detects network traffic, even if the data detected is not destined for the server.

10.3 Checking the Power Supply

There is a test button and LED located on the base of the power supply of the Origin200 and Origin Vault, as shown in Figure 10-2.

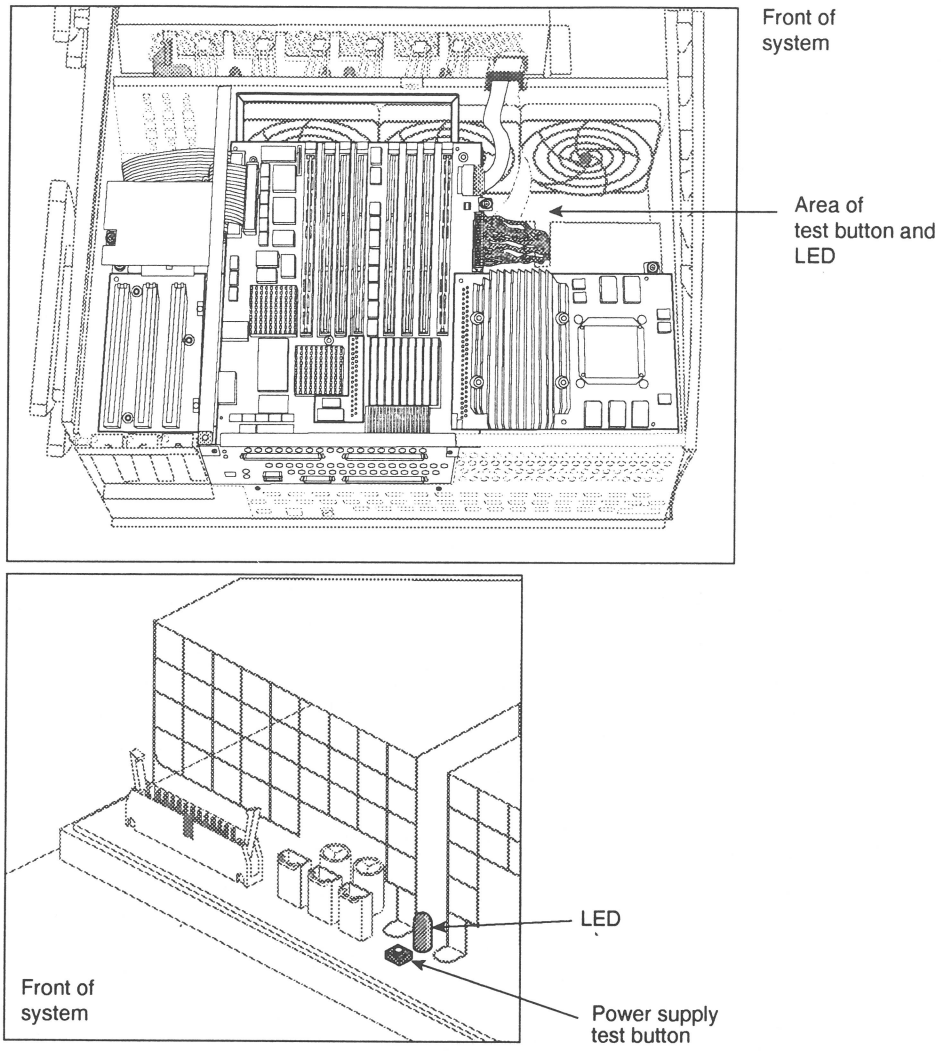

Figure 10-2 Location of the Power Supply Test Button and LED (Origin200 Shown)

To test the power supply, press and hold the button. If the green LED lights while you are pressing the button, the power supply is OK. If the green LED fails to light, there may be a problem with the power supply.

Chapter 11

Removing and Replacing Internal Parts

This chapter describes how to remove and install internal parts of the Origin200 server and Origin Vault expansion option. It contains the following sections:

- SCSI backplane
- fans
- system controller
- logic carrier
- checking and replacing the power supply
- differential/single-ended converter board

Procedures to remove and replace the following components are described in other chapters in this guide:

- Memory is described in Chapter 7, "Installing and Removing Memory."
- PCI boards are described in Chapter 8, "Installing and Removing PCI Option Boards."

3.5-inch and 5.25-inch peripherals are described in Chapter 9, "Installing and Configuring Peripherals."

Note: Because of the similarities between the Origin200 server chassis and Origin Vault expansion option chassis, illustrations in the following sections often show only one chassis type.

11.1 Tools Required to Remove and Replace Components

Tools required to service parts inside the Origin200 server:

- #2 Phillips screwdriver
- grounding (wrist) strap
- needlenose pliers or large tweezers (when servicing the fans)

11.2 Miscellaneous Fasteners

The following miscellaneous fasteners are used in the Origin200 server:

- plastic rivets to attach the fans to the fan bulkhead; spare rivets are included with replacement fans from Silicon Graphics
- screws, Phillips, 6x32, 1/4-inch

11.3 Preparing the Origin200/Origin Vault for Servicing

The procedures in this step apply to all subsequent service instructions in this chapter, except for replacing the module system controller.

Follow these steps to prepare the Origin200 server or Origin Vault expansion option for servicing:

1. Shut down the system.
2. Turn off the main power switch.
3. Disconnect all of the cables that are attached to the rear of the system (power, CrayLink Interconnect, Ethernet, SCSI, etc.).
4. Place the system on its side on a flat work surface.

   Caution: Two people are required to lift and move the chassis.

   - If the system is mounted in an equipment rack, remove it according to the instructions in "Removing a Server From an Equipment Rack," in Chapter 5, "Installing an Origin200 System in a Rack."
   - If the system is in a tower configuration, you may wish to place a thin, soft pad (such as a cloth or piece of cardboard) under the top edge of the system to keep the top-cap from becoming marred or scratched.
5. Remove the chassis access cover, as shown in Figure 11-1.

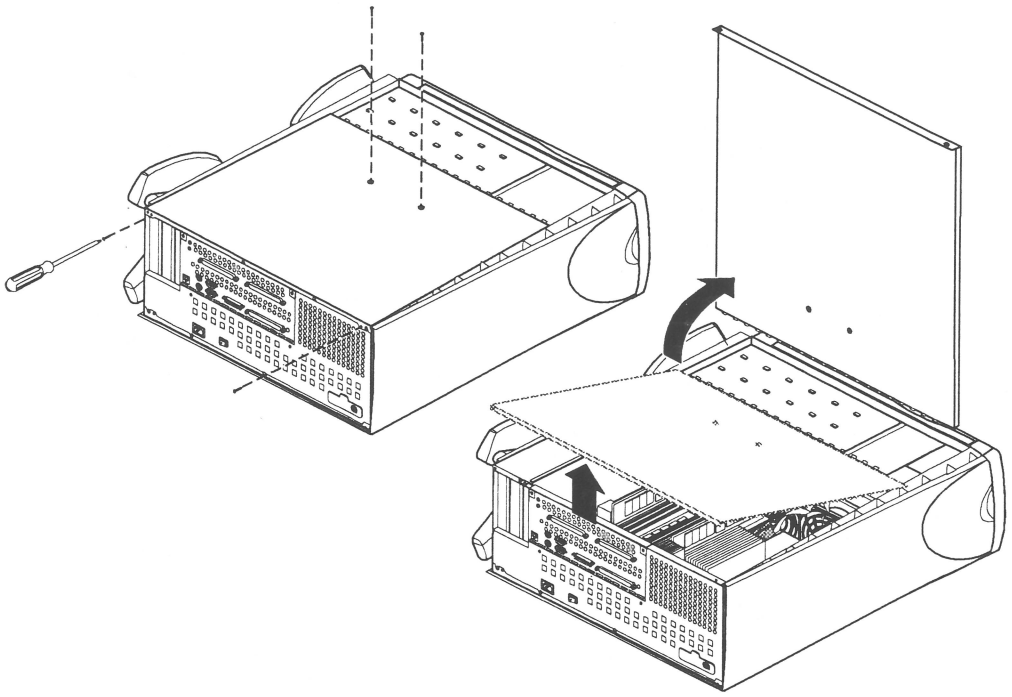

Figure 11-1 Removing the Chassis Access Cover

6. Attach one end of a grounding strap to your wrist and the other to a metal portion of the chassis.

Warning: **Whenever you work on internal components, always use a grounding (wrist) strap to prevent the flow of potentially damaging static electricity.**

You are now finished preparing the system for servicing. Proceed with the next appropriate section, depending upon which component you are replacing.

11.4 Replacing the SCSI Backplane

If you have not done so already, follow the procedures in Section 11.3 to make sure the system is opened up and ready to work on.

1. Remove any 3.5-inch drives from the drive bays.
2. Detach the power cables from the SCSI backplane.
   - Note that the power cable plugs differ from each other. Figure 11-2 shows their locations.
   - If you are able, detach the SCSI cable from its connector; otherwise, wait until the backplane is partway out of the chassis.

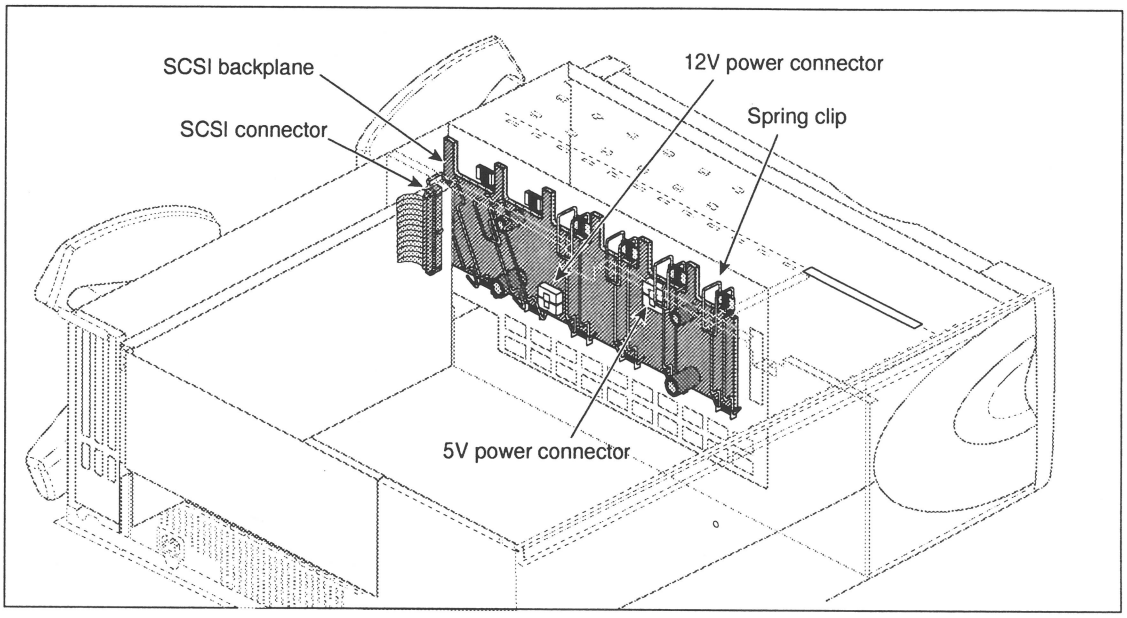

Figure 11-2 Cable Connections and Spring Clips On the SCSI Backplane

3. Snap down the six spring clips on the SCSI backplane, as pointed out in Figure 11-2.
4. Grasping the SCSI backplane by the edges, tilt it out. The backplane hangs on two pins; pull the backplane up off the pins.
5. With the board partway out of the chassis, unhook the SCSI cable at the left side of the SCSI backplane, if you have not already done so. Remove the backplane from the chassis and set it aside.

11.4.1 Installing A New SCSI Backplane

Follow these steps to install a new SCSI backplane:

1. Hang the new SCSI backplane over the guide pins on the sheet metal wall (the one towards the front of the chassis).
2. As you lower the board in place, gently press in at the bottom of the board.
3. Push the top of the SCSI backplane towards the sheet metal wall, being careful not to damage the LEDs as you guide them through their respective holes.
4. Reattach the cables.
5. Snap the six spring clips back up into place.

11.5 Replacing Fans

If you have not done so already, follow the procedures in Section 11.3 to make sure the system is opened up and ready to work on. Once you have opened the Origin200 chassis, follow these steps to remove a fan:

1. Unplug the power connector from the fan to the power supply, as shown in Figure 11-3.
2. Remove the two plastic rivets that hold the fan to the sheet metal, as shown in Figure 11-3. Push them out from behind the sheet metal with your fingertip.

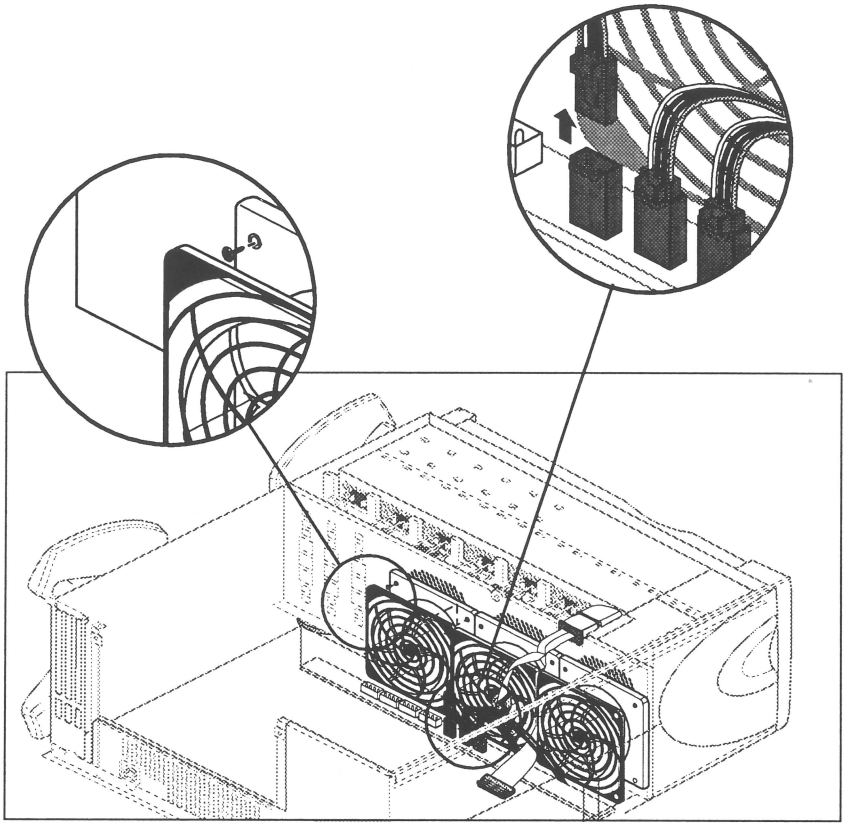

Figure 11-3 Disconnecting the Fan and Fan Power Cable (Other Components Removed For Clarity)

3. Lift the fan out of the system, as shown in Figure 11-4.

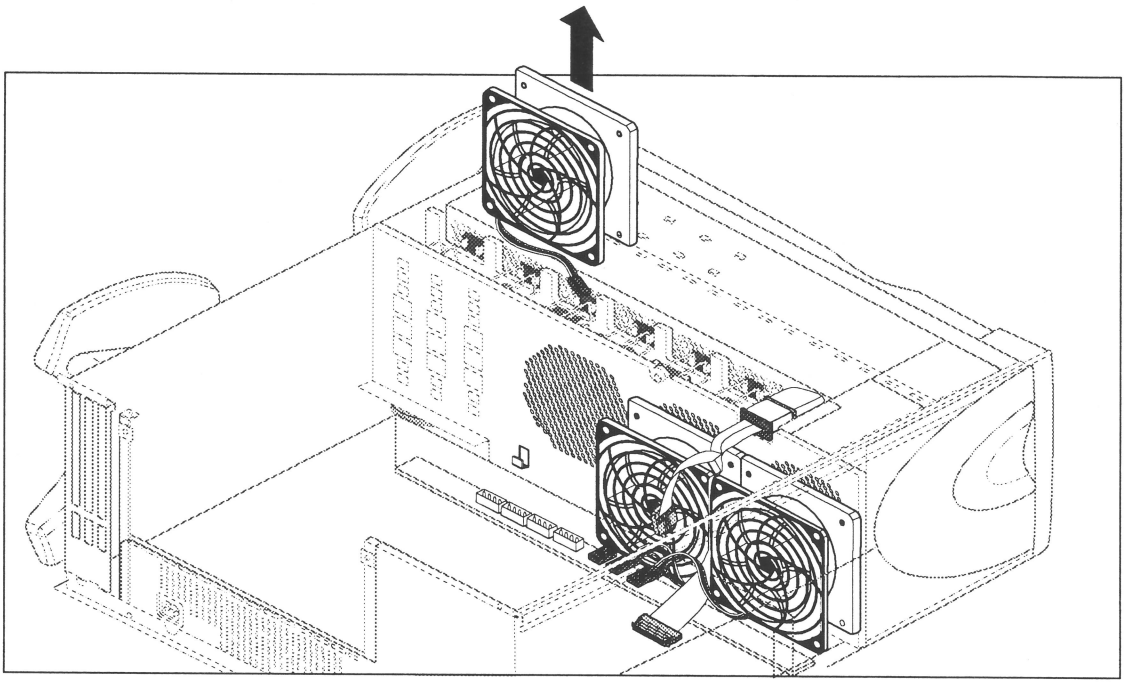

Figure 11-4 Removing the Fan From the System

11.5.1 Installing a New Fan

Follow these steps to install a fan:

1. Lower the new fan into the system.
2. Snap a plastic rivet in the top corners of the fan to secure it to the sheet metal.
   - The rivet has two parts: a sleeve and a pin.
   - Place the pin part-way inside the sleeve, then slide both through the hole in the fan.
   - Press the pin and sleeve together towards the sheet metal. The pin and sleeve will slide into place with the ends of both protruding through the sheet metal.
   - If you have large hands or fingers, you may find it easier to handle the rivets with needlenose pliers or large tweezers.

11.6 Replacing the Module System Controller

Note: For this procedure, you do not have to follow the instructions in "Preparing the Origin200/Origin Vault for Servicing." The module system controller can be removed with the system in place and fully assembled.

The module system controller (MSC) is mounted on a sheet metal carrier to form a single, assembly. This assembly is housed behind the plastic bezel crossbar that forms the system front panel (where the status LED is located).

Follow these steps to remove the MSC:

1. Power the system down and turn off the master power switch.
2. Open the front door.
3. Remove the front panel.
   - With your index finger, press against the catch on the inside of the recess in the crossbar, on the outside (right or top) of the recess. This recess is where the door lock fits. See Figure 11-5.
   - The crossbar swings out, hinging on the far side from the catch. Pull the crossbar out and set it aside.

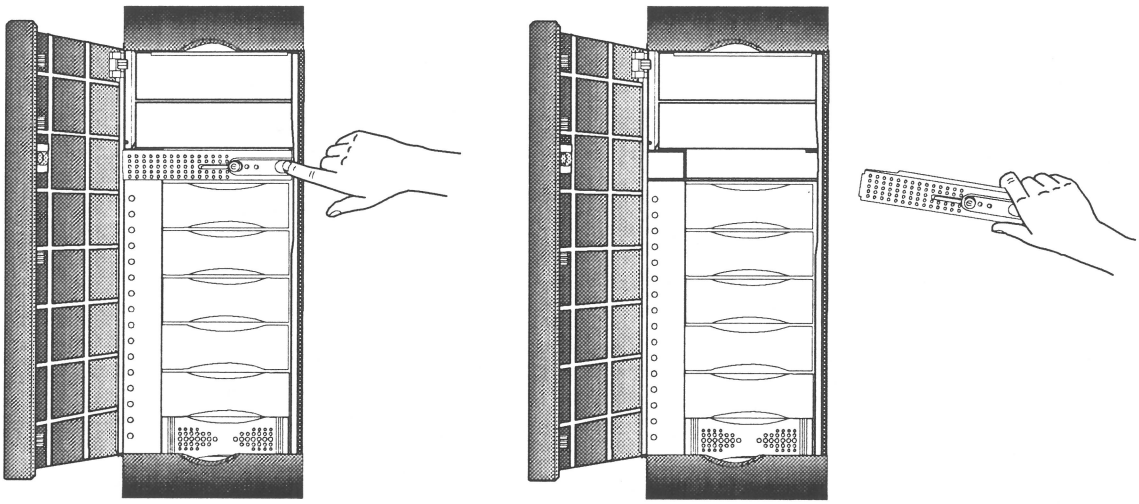

Figure 11-5 Removing the Front Bezel Crossbar

4. Using a #2 Phillips screwdriver, remove the two screws that fasten the system controller assembly to the chassis, as shown in "Replacing the Module System Controller."

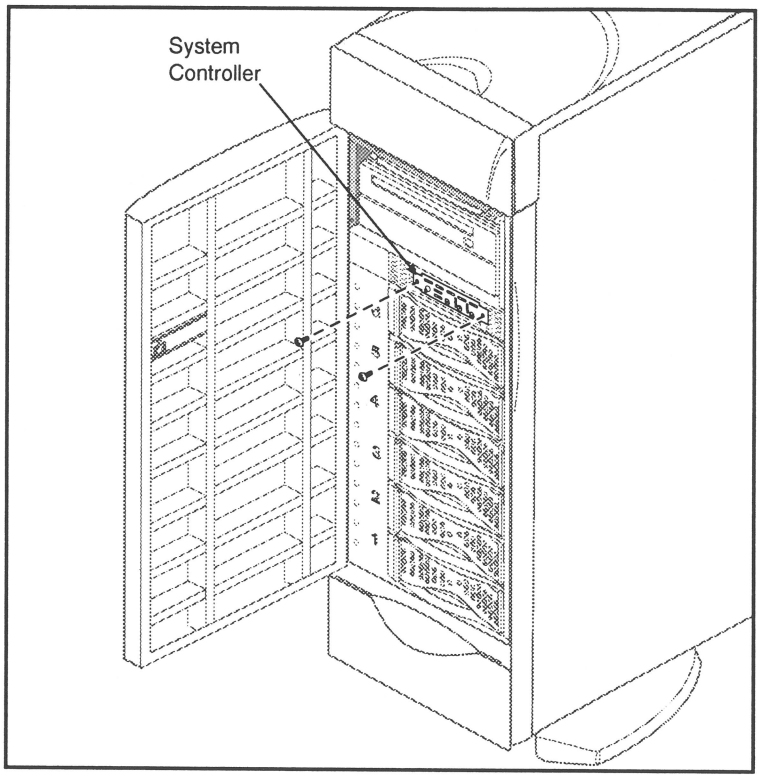

Figure 11-6 Removing the System Controller Assembly From the Chassis

5. Pull out the system controller assembly and lay it on a flat worksurface.

Warning: **To prevent ESD damage to the module system controller, be careful not to touch the board's edge connectors (gold fingers).**

6. Remove the system controller board from its carrier; it is secured by a screw and two pins, as shown in Figure 11-7.
   - Using a #2 Phillips screwdriver, remove the screw.
   - Slide the board on the carrier until you can lift the board off the pins.

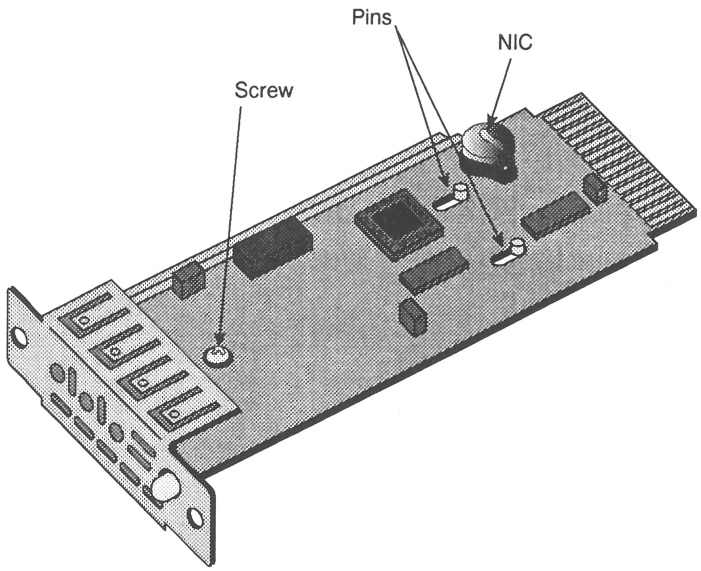

Figure 11-7 Removing the Module System Controller Board From the Carrier

11.6.1 Installing a New Module System Controller

Follow these steps to attach a new module system controller board to the sheet metal carrier and install it in the system:

1. Position the replacement controller board over the pins; grasping the board by its sides, slide it so that the pins lock, making sure that the LED and button go through the proper holes. Screw in the reserved screw, as shown in Figure 11-7.
2. Remove the disks (or blanking plates if no disks are installed) from slots 5 and 6 of the Origin200 server. Removing the disks (or blanking plates) allows you to see how the edge connector on the module system controller board aligns with its socket inside the chassis.
3. Slide the system controller assembly into the chassis.
   - The assembly only installs in one direction.
   - If necessary, guide the edge connector into its socket.
   - When the edge connector is fully seated, the front of the carrier assembly should be flush with the chassis.



Warning: **To prevent ESD damage to the module system controller, be careful not to touch the board's edge connectors (gold fingers).**

4. Replace the two Phillips screws that hold the carrier in place.
5. Replace the crossbar bezel.

11.7 Replacing the Logic Carrier

Follow these steps to remove the logic carrier.

1. If you have not done so already, prepare the system for servicing as described in Section 11.3, "Preparing the Origin200/Origin Vault for Servicing."
2. If there are any PCI boards in the system, remove them.
3. Using a #2 Phillips screwdriver, remove the sheet metal screw and captive fastener that secure the PCI plenum divider and lift the divider out of the system. See Figure 11-8.

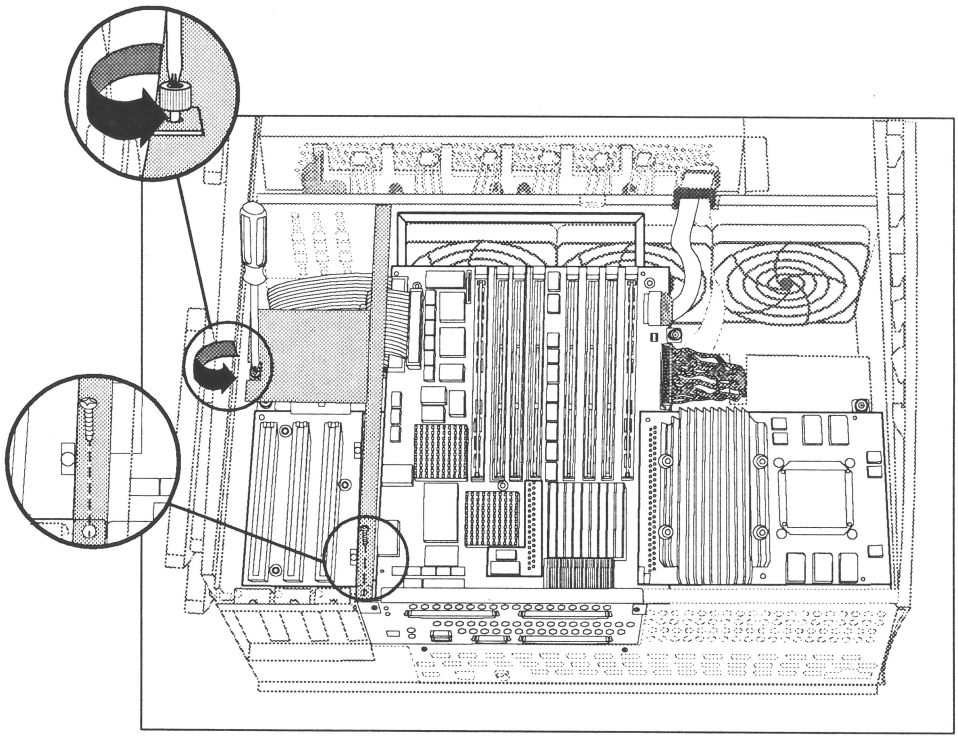

Figure 11-8 Unfastening the PCI Plenum Divider Sheetmetal

4. Lift the PCI plenum divider sheetmetal out of the system, as shown in Figure 11-9.

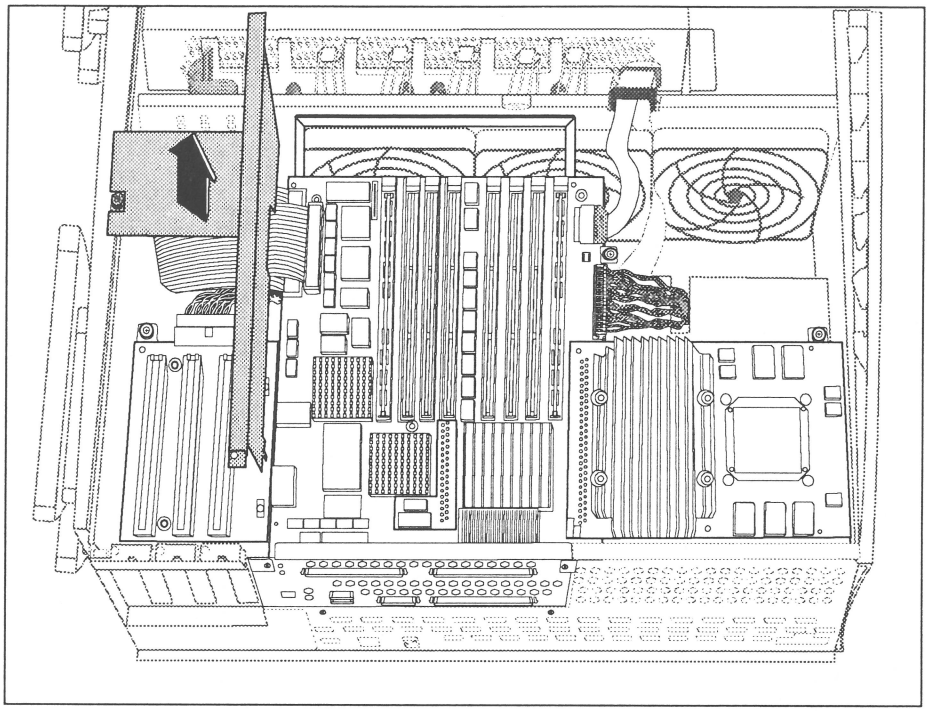

Figure 11-9 Removing the PCI Plenum Divider

5. Disconnect the cables that are attached to the logic carrier, as shown in Figure 11-10.
   - Detach the two SCSI cables.
   - Disconnect the power connector.
   - Remove the system controller cable.
   - Disconnect the PCI power cable.

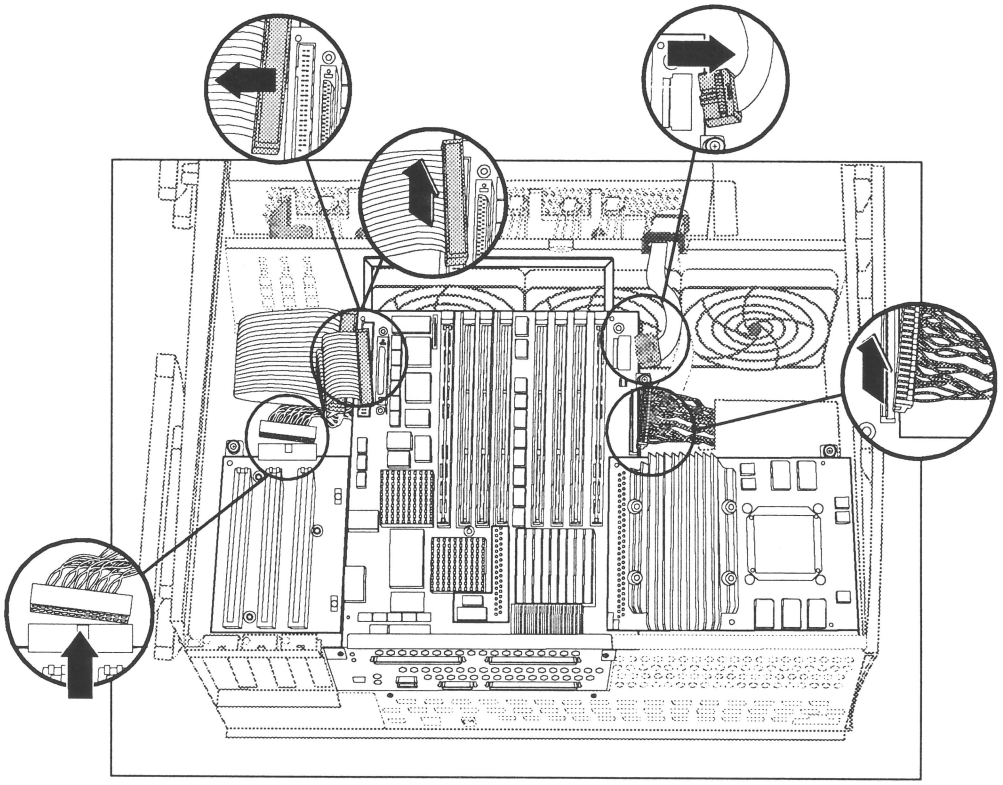

Figure 11-10 Disconnecting Cables from the Logic Carrier

6. Unfasten the captive screws and sheet metal screws that secure the logic carrier. See Figure 11-11.

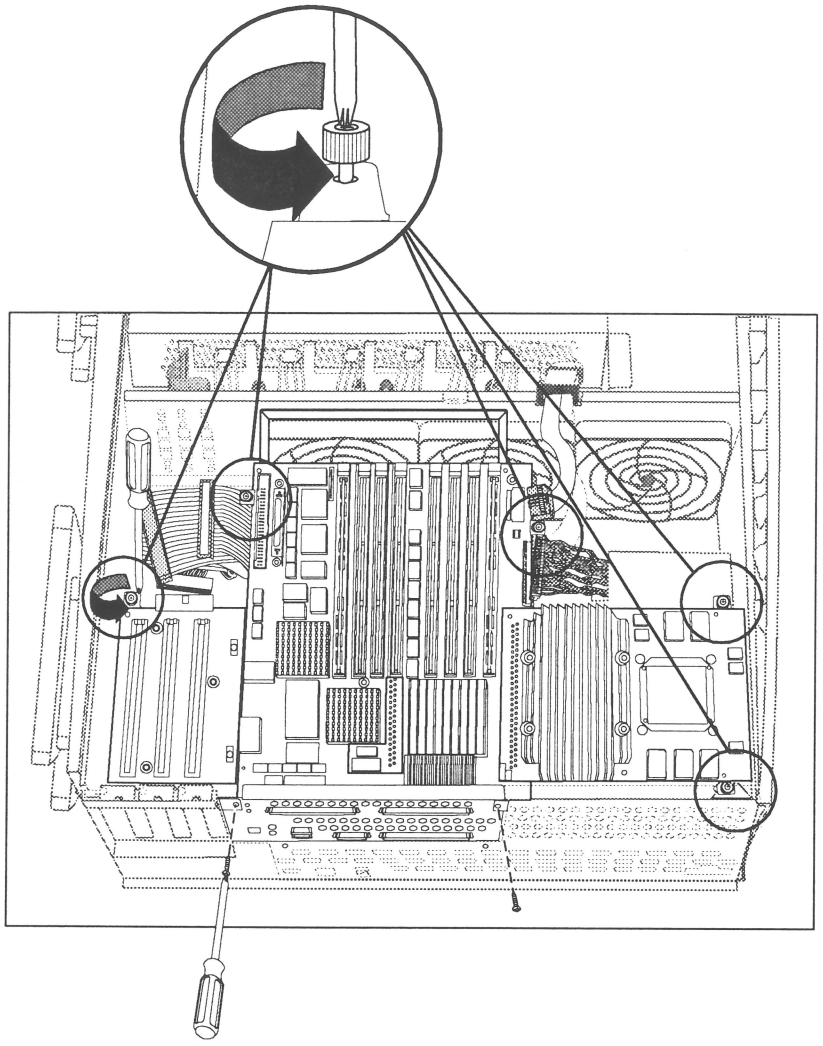

Figure 11-11 Unfastening the Logic Carrier

7. Lift the logic carrier out of the system, as shown in Figure 11-12.
    - Grasp the logic carrier handle with one hand and the connector panel with the other.
    - As you lift the logic carrier, tilt the side with the CPU daughter card up slightly higher than the side with the PCI backplane. Angling the logic carrier in this way makes it easier remove.

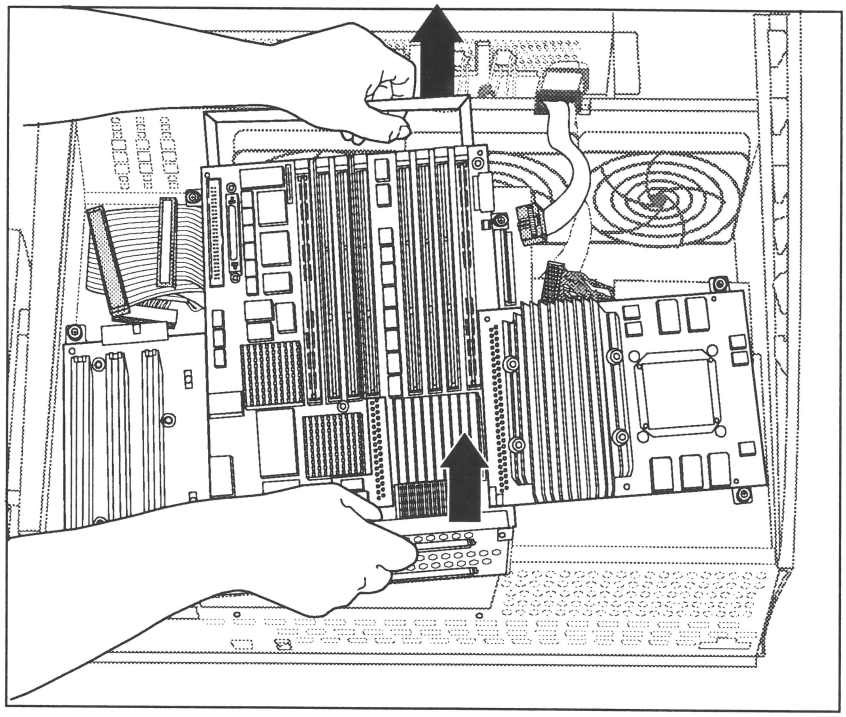

Figure 11-12 Removing the Logic Carrier

11.7.1 Installing a New Logic Carrier

Follow these steps to replace the logic carrier.

1. Lower the new logic carrier into the system, as shown in Figure 11-13.

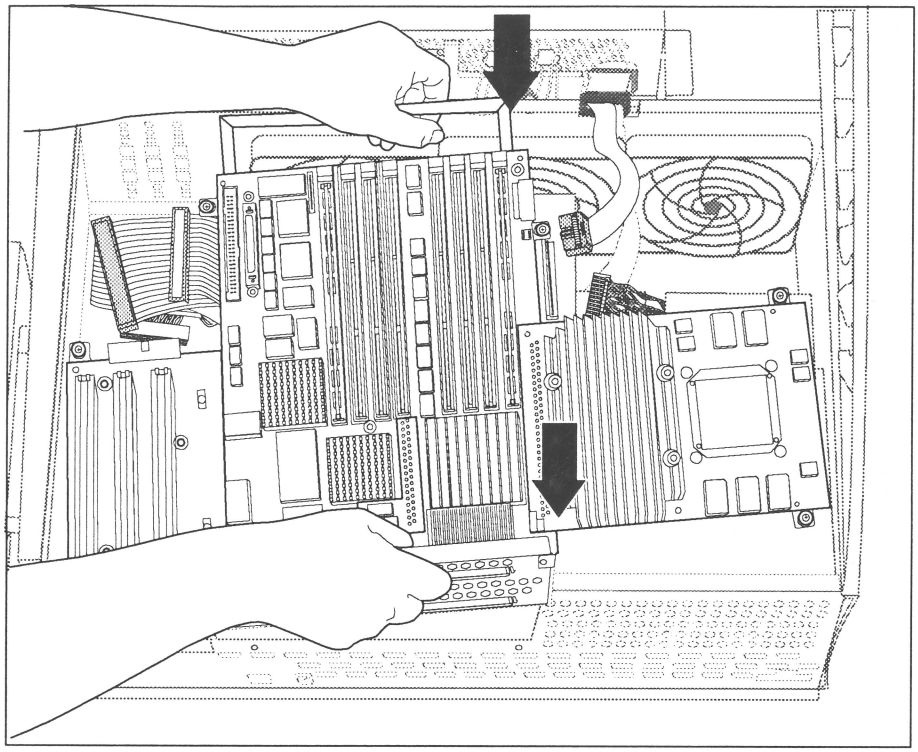

Figure 11-13 Lowering A Logic Carrier Into the System

2. Secure the logic carrier by tightening the captive fasteners and installing the sheet metal screws, as shown in Figure 11-14.

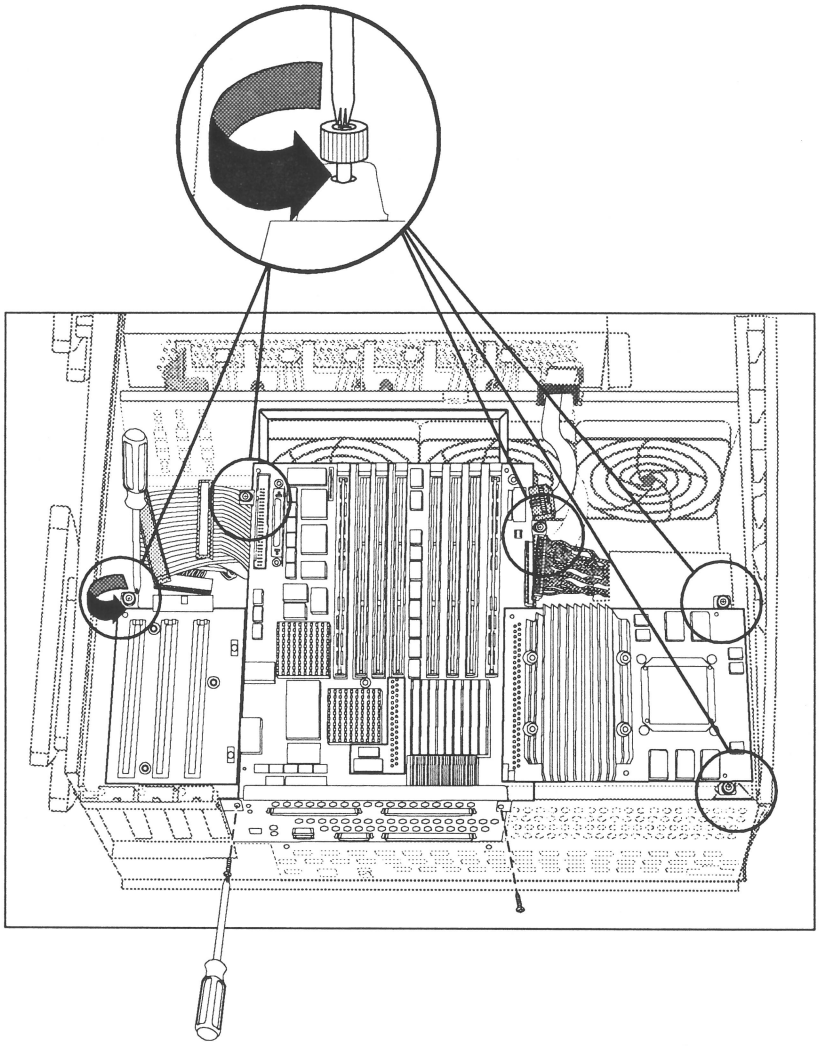

Figure 11-14 Fastening the Logic Carrier

3. Attach the power, SCSI, and system controller cables to the logic carrier, as shown in Figure 11-15.

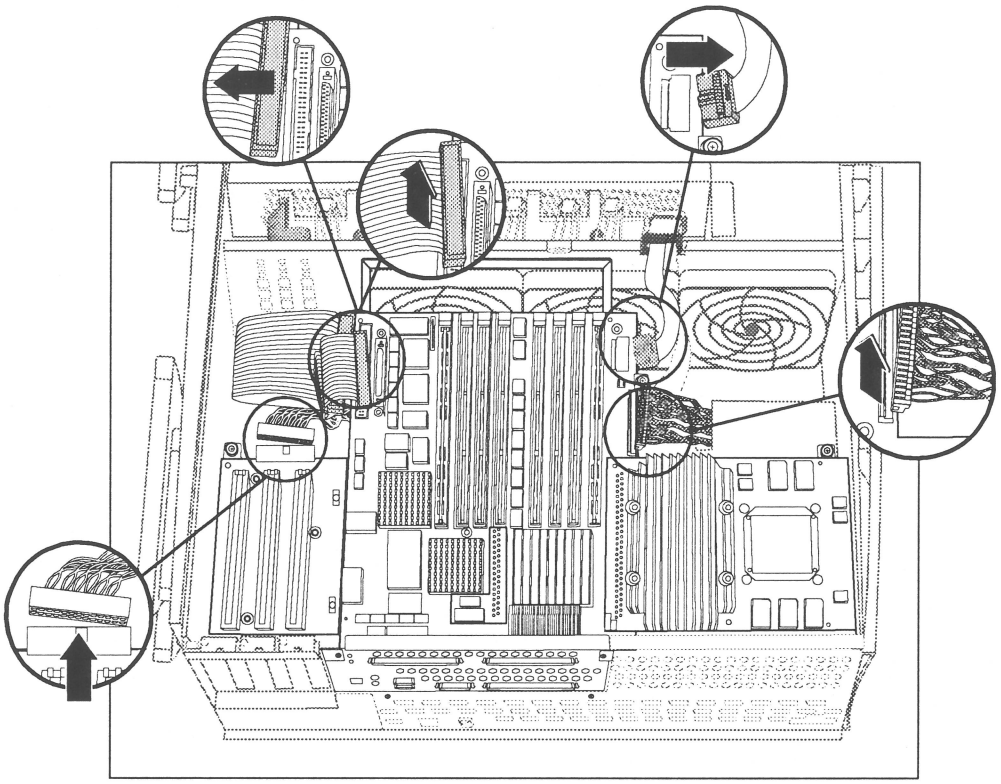

Figure 11-15 Attaching the Logic Carrier Cables

4. Install the PCI plenum divider sheet metal as shown in Figure 11-16.
   - Be extremely careful not to pinch the SCSI cables when installing the PCI plenum divider.
   - Make sure that the SCSI cables are not underneath the plenum divider captive screw.

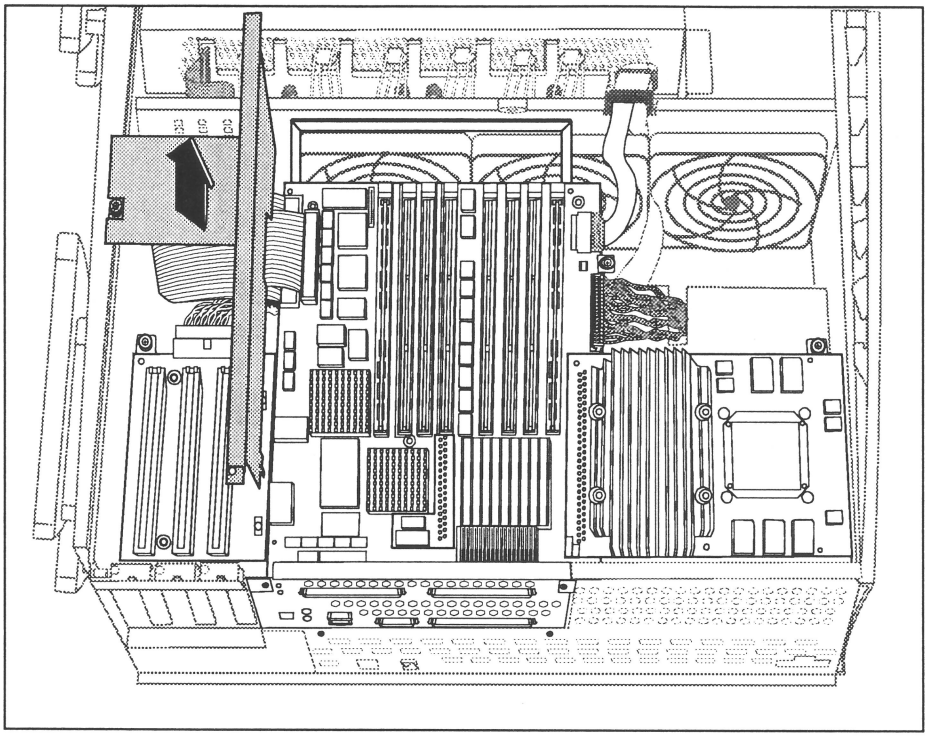

Figure 11-16 Installing the PCI Plenum Divider

5. Fasten the PCI plenum divider by tightening the captive screw and installing the sheet metal screw, as shown in Figure 11-17.

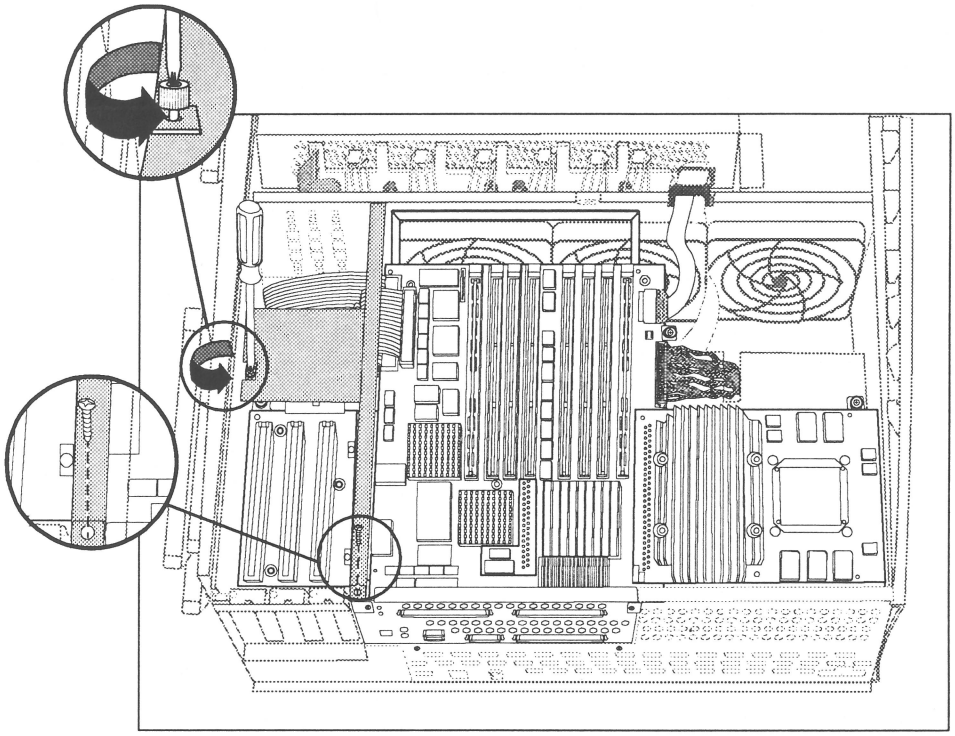

Figure 11-17 Fastening the PCI Plenum Divider

You are finished replacing the logic carrier. You can now reinstall any PCI option boards that were present in the system, and return the system to working order.

11.8 Replacing the Differential/Single-Ended Converter Board

To replace the board that converts the 3.5-inch drive controller from single-ended to differential, you remove the L-shaped converter board carrier (also known as the logic carrier—very different from the Origin200 server's logic carrier) from the chassis and remove the converter board from it. Follow these steps:

1. Prepare the Origin Vault for component replacement following procedures in Section 11.3, "Preparing the Origin200/Origin Vault for Servicing."
2. Detach the converter board's power cable, as shown in Figure 11-18. Detach the SCSI cable from the right end of the converter board and push the cable away from the board.
3. Detach the cable to the 5.25-inch drive from the connector at the edge of the converter board carrier, as shown in Figure 11-18. Leave in place the 5.25-inch drive cable connecting the other side of this connector to the SCSI port on the converter board carrier.

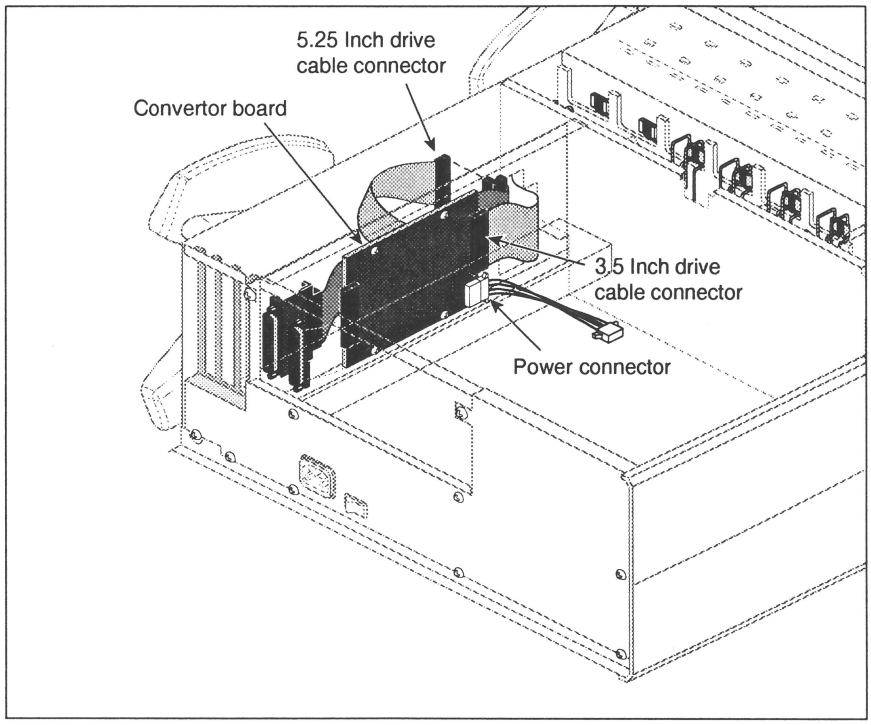

Figure 11-18 Detaching the Converter Board Cables

4. With a #2 Phillips screwdriver, unscrew the four screws that secure the converter board carrier, as shown in Figure 11-19. Reserve the screws.

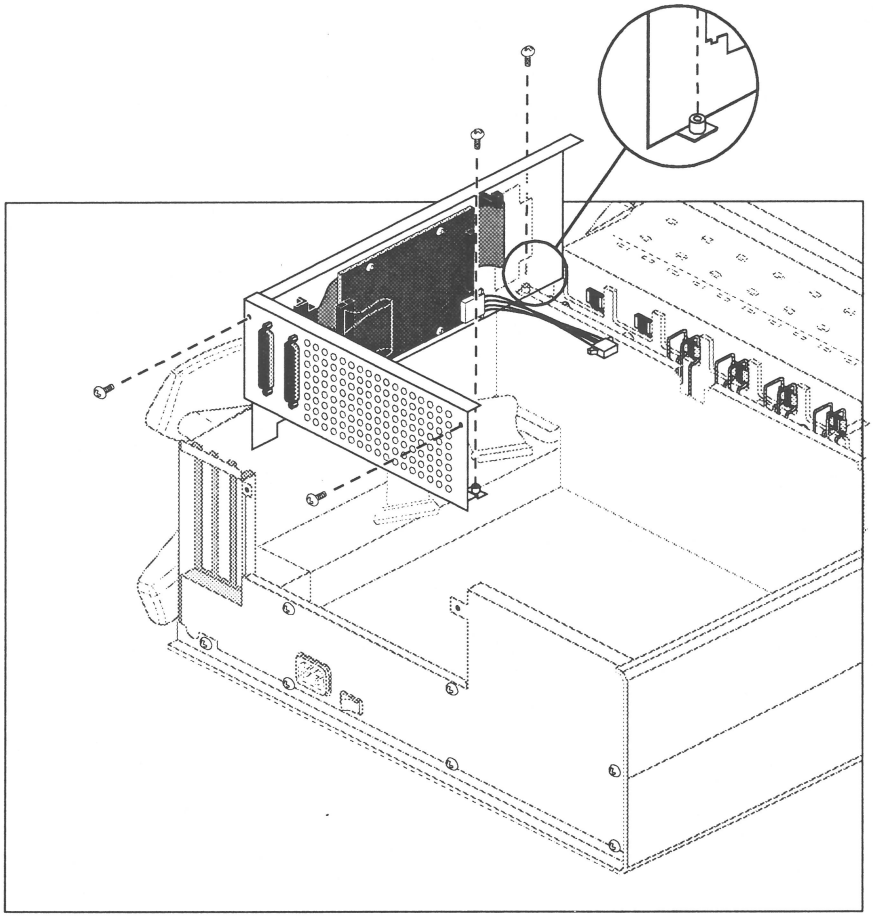

Figure 11-19 Unscrewing the Converter Board Carrier

5. Place the converter board carrier on the work surface.
6. Unscrew the four screws that secure the converter board to the carrier, as shown in Figure 11-20. Reserve the screws.

   Caution: Take care not to damage the 5.25-inch drive cable behind the board.

7. Detach the left-hand SCSI cable from the converter board.

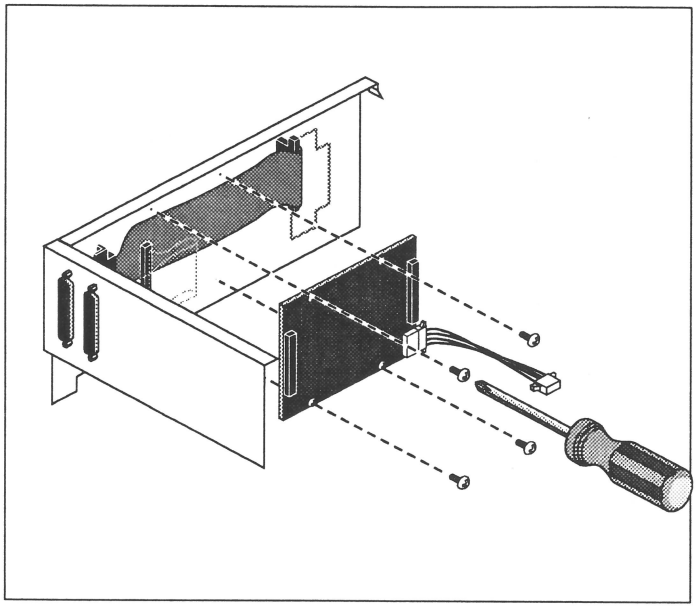

Figure 11-20 Unscrewing the Converter Board

8. Lift the converter board away from the carrier.

11.8.1 Installing a New Differential/Single-Ended Converter Board

Follow these steps to install a new converter board:

1. Attach the left-hand SCSI cable to the new board's left-hand connector and insert the board.
2. Attach the converter board to the L-shaped carrier using the reserved screws.
3. Insert the carrier into the chassis; screw it in.
4. Reattach the cable to the 5.25-inch drive to the connector at the edge of the converter board carrier, as shown in Figure 11-18.
5. Reattach the SCSI cable to the right end of the converter board. Attach the converter board's power cable.
6. If you are finished replacing components, remove the wrist strap, replace the Origin Vault cover, and restore the Origin Vault to its working position.



Warning: **Inserting the rackmountable Origin Vault option into a rack or lifting the Origin Vault standalone tower requires two people.**

11.9 Checking and Replacing the Origin200 Power Supply

The power supplies used in the Origin200 server and Origin Vault expansion option are identical. However, because of slight differences between each chassis, the procedures for

removing and replacing the power supply varies between the Origin200 server and Origin Vault expansion option.

This section describes how to remove the Origin200 server power supply. To remove the Origin Vault power supply, see Section 11.10, "Checking and Replacing the Origin Vault Power Supply."

Before replacing a suspect power supply, you may wish to test it using the built-in test LED. See "Checking the Power Supply" in Chapter 10.

Follow these steps to replace the power supply.

1. If the system is in a tower configuration, while preparing the unit for servicing (see Section 11.3, "Preparing the Origin200/Origin Vault for Servicing") also remove the second side panel.
   - Using a #2 Phillips screwdriver, remove the two screws that secure the second side panel to the rear of the chassis.
   - Slide the panel out and back.
   - Continue preparing the unit for servicing as described in Section 11.3, "Preparing the Origin200/Origin Vault for Servicing."
2. Remove any PCI boards that are in the system.
3. Remove the logic carrier as described in Section 11.7, "Replacing the Logic Carrier."
4. Disconnect all cables from the power supply: fan power, the combined SCSI backplane and 5.25-inch drive power connector, and module system controller cable.
5. Using a #2 Phillips screwdriver, remove the screws that secure the power supply to the chassis, as shown in Figure 11-21.
   - There are six screws at the rear of the power supply.

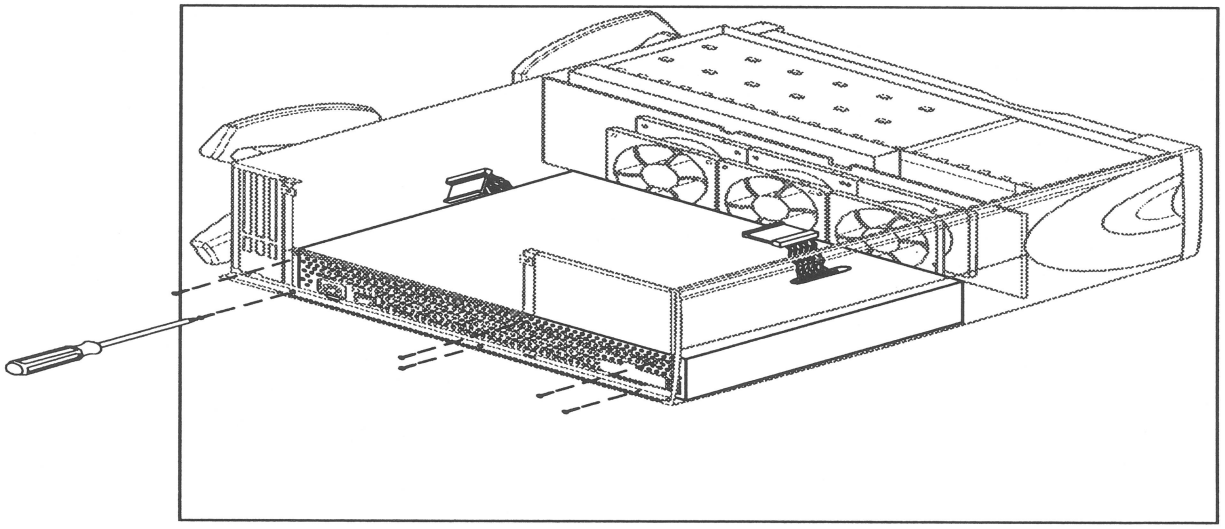

Figure 11-21 Removing the Power Supply Screws, Origin200 Server

6. Remove the power supply, as shown in Figure 11-22.
   - Slide the power supply forward (towards the fans) until it unlatches from the chassis.
   - Lift the power supply out of the system.

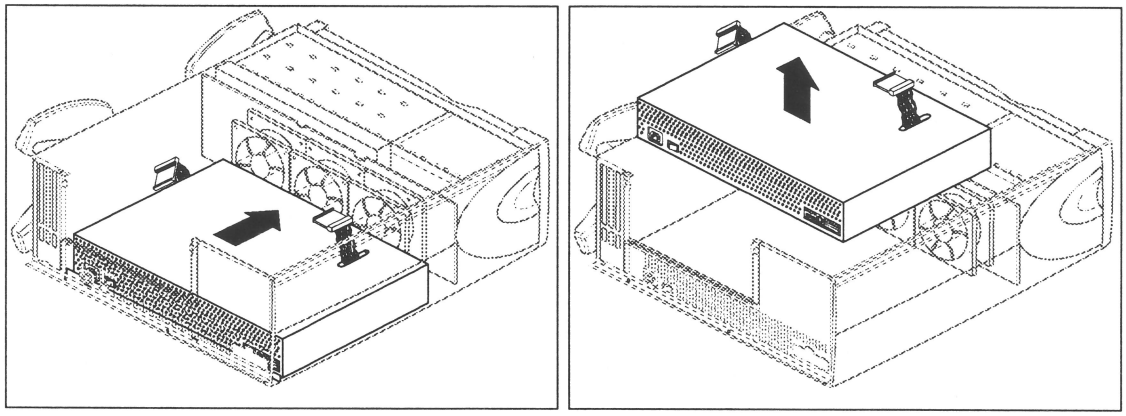

Figure 11-22 Removing the Origin200 Server Power Supply

11.9.1 Installing a New Power Supply In the Origin200 Server

Follow these steps to install a new power supply in an Origin200 server:

1. Lower the power supply into the chassis with the power switch and receptacle towards the rear of the system.
2. Reconnect the power cord and test the power supply as described in Section 10.3, "Checking the Power Supply."
3. Slide the power supply back until it latches on the underside and the power switch and receptacle are flush with the back of the chassis.
4. Install the screws at the rear of the system, as shown in Figure 11-23.
   - Six screws secure the power supply to the chassis.

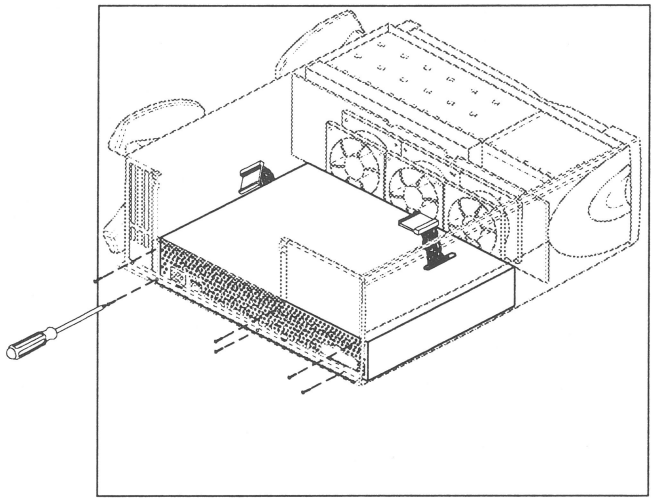

Figure 11-23 Location of Origin200 Server Power Supply Screws

5. Reconnect some of the cables: fan power cables, SCSI drive power cable, module system controller cable.
6. Install the logic carrier and any PCI boards.
7. Replace the chassis access cover.
8. If the system is in a tower configuration, replace both side panels.

11.10 Checking and Replacing the Origin Vault Power Supply

The power supplies used in the Origin200 server and Origin Vault expansion option are identical. However, because of slight differences between each chassis, the procedures for removing and replacing the power supply varies between the Origin200 server and Origin Vault expansion option.

This section describes how to remove the Origin Vault expansion option power supply. To remove the Origin200 server power supply, see Section 11.9, "Checking and Replacing the Origin200 Power Supply."

Before replacing a suspect power supply, you may wish to test it using the built-in test LED. See "Checking the Power Supply" in Chapter 10.

Follow these steps to replace the power supply.

1. If you have not done so already, prepare the chassis for servicing. See Section 11.3, "Preparing the Origin200/Origin Vault for Servicing."
2. Disconnect all internal cables from the power supply.
3. Remove the L-shaped differential/single-ended converter board. See Section 11.8, "Replacing the Differential/Single-Ended Converter Board."

4. Disconnect the six screws that secure the power supply to the back of the chassis.
5. Slide the power supply forward (towards the fans) until it unlatches
6. Lift the power supply up and out of the chassis. See Figure 11-24.

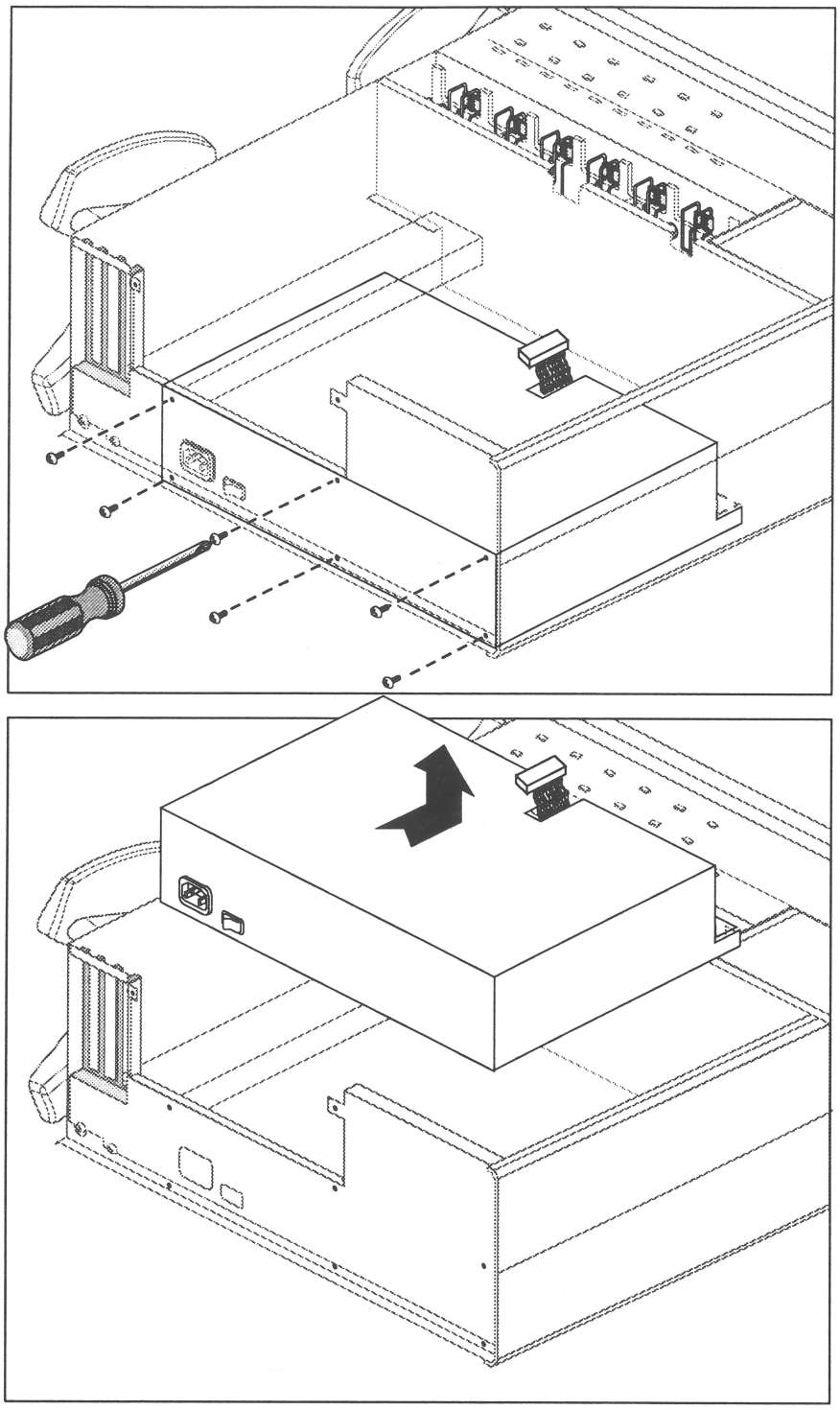

Figure 11-24 Removing the Origin Vault Power Supply

11.10.1Installing a New Power Supply In the Origin Vault Expansion Option

Follow these steps to install a new power supply:

1. Lower the power supply into the system and slide it back, away from the fans, until it latches. The power receptacle should be flush with the rear of the chassis.
2. Reconnect the power cord and test the power supply as described in Section 10.3, "Checking the Power Supply."
3. Replace the six screws that secure the power supply to the rear of the chassis. See Figure 11-24.
   - Unlike Origin200, there is no screw securing the bottom of the power supply, only the six screws at the rear of the chassis.
4. Replace the L-shaped differential/single-ended SCSI converter board. See Section 11.8, "Replacing the Differential/Single-Ended Converter Board."
5. Reconnect the internal cables.
6. Reassemble the Origin Vault (chassis cover, side panel).

Appendix A

Connector Pinout Assignments

This appendix descibes the pinouts of the following external connectors on the Origin200 server:

- serial ports
- parallel port
- Ethernet port
- AUX (module system controller) port

For a description of cables that can be used with the serial and diagnostic ports, see Appendix B, "Cable Descriptions."

This appendix also describes connectors that are available on the Origin Vault expansion option:

- single-ended, high-density SCSI connector
- differential , high-density SCSI connector

A.1 Serial Ports

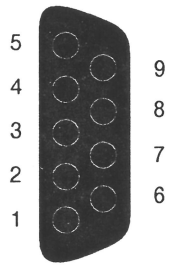

Figure A-1 Origin200 Serial Port Pinout Assignments

Table A-1 shows the connector pin assignments for the serial ports in RS-232 mode.

Table A-1 Origin200 Serial Port Pin Assignments, RS-232 Mode

Pin	Assignment
1	Data Carrier Detect (DCD)
2	Receive Data (RXD)
3	Transmit Data (TXD)
4	Data Terminal Ready (DTR)
5	Ground (GND)
6	Data Set Ready (DSR)
7	Request To Send (RTS)
8	Clear To Send (CTS)
9	(Not Connected)

Table A-2 shows the connector pin assignments for the serial ports in RS-422 mode.

Table A-2 Origin200 Serial Port Pin Assignments, RS-422 Mode

Pin	Assignment
1	(Reserved)
2	Receive Data– (RXD–)
3	Transmit Data– (TXD–)
4	Transmit Data+ (TXD+)
5	Signal Ground (GND)
6	Receive Data+ (RXD+)
7	Output Handshake (HSKo)

Table A-2 Origin200 Serial Port Pin Assignments, RS-422 Mode

Pin	Assignment
8	Input Handshake (HSKi)
9	(Reserved)

A.2 Parallel Port

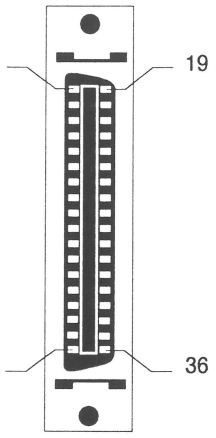

Figure A-2 Origin200 Parallel Port Pinout Assignments

The Origin200 parallel port uses a 36-pin Centronics connector (IEEE 1284-C). Table A-3 shows the connector pinout assignments for the parallel port.

Table A-3 Origin200 Parallel Port Pin Assignments

Pin	Assignment
1	STB
2	DATA1
3	DATA2
4	DATA3
5	DATA4
6	DATA5
7	DATA6
8	DATA7
9	DATA8
10	ACK
11	BUSY

Table A-3 Origin200 Parallel Port Pin Assignments

Pin	Assignment
12	PE
13	ONLINE
14	PR/SC
15	NOPAPER
16	(Not Connected)
17	NOINK
18	(Not Connected)
19–30	Signal Ground (GND)
31	RESET
32–36	(Not Connected)

A.3 Ethernet Port

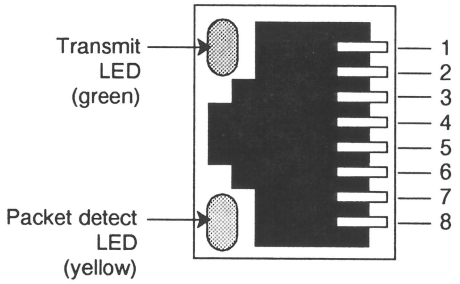

Figure A-3 Origin200 Ethernet 10-BASE T/100-BASE T Port Pinout Assignments

Table A-4 shows the connector pinout assignments for the Ethernet 10-Base-T/100-Base-T port.

Table A-4 Origin200 Ethernet 10-Base-T/100-BASE T Port Pin Assignments

Pin	Assignment
1	Transmit +
2	Transmit –
3	Receive +
4	(Reserved)
5	(Reserved)
6	Receive –

Table A-4 Origin200 Ethernet 10-Base-T/100-BASE T Port Pin Assignments

Pin	Assignment
7	(Reserved)
8	(Reserved)

A.4 AUX Port

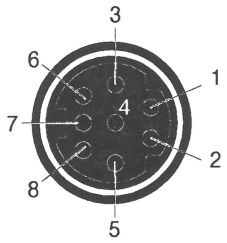

Figure A-4 Origin200 AUX Port Pinout Assignments

The AUX port is used to communicate with the module system controller (MSC). You can attach a serial (ASCII) terminal to the port, or attach a modem for remote access. Table A-5 shows the connector pin assignments for the port.

Table A-5 Origin200 AUX Port Pin Assignments

Pin	Assignment	Description
1	DTR	Data Terminal Ready
2	CTS	Clear to Send
3	TXD	Transmit Data
4	GND	Ground
5	RXD	Receive Data
6	RTS	Request to Send
7	DCD	Data Carrier Detect
8	GND	Ground

Note: These pin assignments are the sames as the ones for the serial ports on the Silicon Graphics Indy and Indigo² workstations and the CHALLENGE S server. Cables that are appropriate for the serial ports of those machines can be used with the AUX port as well.

A.5 Single-Ended SCSI (Origin Vault)

Table A-6 lists the pinouts for the single-ended connection on an Origin Vault expansion option. In this table, the hyphen preceding a signal name indicates that the signal is low.

Table A-6 Origin Vault 68-Pin Differential High-Density SCSI Pinouts

Signal Name	Pin Number	Pin Number	Signal Name
Ground	1	35	-DB(12)
Ground	2	36	-DB(13)
Ground	3	37	-DB(14)
Ground	4	38	-DB(15)
Ground	5	39	-DPARH
Ground	6	40	-D0
Ground	7	41	-D1
Ground	8	42	-D2
Ground	9	43	-D3
Ground	10	44	-D4
Ground	11	45	-D5
Ground	12	46	-D6
Ground	13	47	-D7
Ground	14	48	-DPAR
Ground	15	49	Ground
Ground	16	50	Ground
TERMPWR	17	51	TERMPWR
TERMPWR	18	52	TERMPWR
SPACING	19	53	Reserved
Ground	20	54	Ground
Ground	21	55	-ATN
Ground	22	56	Ground
Ground	23	57	-BSY
Ground	24	58	-ACK
Ground	25	59	-RST
Ground	26	60	-MSG
Ground	27	61	-SEL
Ground	28	62	-C/D
Ground	29	63	-REQ
Ground	30	64	-I/O
Ground	31	65	-DB(8)
Ground	32	66	-DB(9)
Ground	33	67	-DB(10)
Ground	34	68	-DB(11)

A.6 Differential SCSI (Origin Vault)

Table A-7 lists pinouts for the differential connection on an Origin Vault expansion option. In this table, the hyphen preceding a signal name indicates that the signal is low.

Table A-7 Origin Vault 68-Pin Differential High-Density SCSI Pinouts

Signal Name	Pin Number	Pin Number	Signal Name
+DB(12)	1	35	-DB(12)
+DB(13)	2	36	-DB(13)
+DB(14)	3	37	-DB(14)
+DB(15)	4	38	-DB(15)
+DPARH	5	39	-DPARH
+Ground	6	40	-Ground
+D0	7	41	-D0
+D1	8	42	-D1
+D2	9	43	-D2
+D3	10	44	-D3
+D4	11	45	-D4
+D5	12	46	-D5
+D6	13	47	-D6
+D7	14	48	-D7
+DPAR	15	49	-DPAR
DIFFSENS	16	50	Ground
TERMPWR	17	51	TERMPWR
TERMPWR	18	52	TERMPWR
Reserved	19	53	Reserved
+ATN	20	54	-ATN
Ground	21	55	Ground
+BSY	22	56	-BSY
+ACK	23	57	-ACK
+RST	24	58	-RST
+MSG	25	59	-MSG
+SEL	26	60	-SEL
+C/D	27	61	-C/D
+REQ	28	62	-REQ
+I/O	29	63	-I/O
Ground	30	64	Ground
+DB(8)	31	65	-DB(8)
+DB(9)	32	66	-DB(9)
+DB(10)	33	67	-DB(10)
+DB(11)	34	68	-DB(11)

Appendix B

Cable Descriptions

This appendix describes various cables that can be used with an Origin200 system, including:

- serial
- AUX port

B.1 Serial Cables

The following sections contain descriptions of various types of serial cables that you can use to attach devices to Origin200.

B.1.1 Printer/Character (ASCII) Terminal Cable

Use this cable to attach a printer or a character (ASCII) terminal to Origin200. The server ships with a cable of this type, and you can purchase an additional or replacement cable from Silicon Graphics or your local service provider.

Table B-1 shows the cable connector pin assignments.

Table B-1 Cable Connector Pin Assignments for Printer/Character (ASCII) Terminal Serial Cable

Pin Number (DB-9 Female)	Pin Number (DB-25)	Signal
1	N/C	
2	2	Receive Data (RXD)
3	3	Transmit Data (TXD)
4		
5	7	Ground (GND)
6	N/C	
7	N/C	

Table B-1 Cable Connector Pin Assignments for Printer/Character (ASCII) Terminal Serial Cable

Pin Number (DB-9 Female)	Pin Number (DB-25)	Signal
8	N/C	
9	N/C	(Not Connected)

B.1.2 Modem Cable (Full-Handshake)

This cable provides request-to-send (RTS) and clear-to-send (CTS) connections, and is appropriate for a modem with RTS/CTS flow control. This cable will also work with other serial devices (except printers and terminals) that do not need RTS/CTS flow control and you can use it with a null modem adapter to attach printers and character terminals. You can purchase this full-handshake serial cable from Silicon Graphics or from your local service provider.

Table B-2 shows the cable connector pin assignments.

Table B-2 Cable Connector Pin Assignments for a Modem Cable

Pin Number (DB-9 Female)	Pin Number (DB-25)	Signal
1	8	Data Carrier Detect (DCD)
2	3	Receive Data (RXD)
3	2	Transmit Data (TXD)
4	20	Data Terminal Ready (DTR)
5	7	Ground (GND)
6	6	Data Set Ready (DSR)
7	4	Request To Send (RTS)
8	5	Clear To Send (CTS)
9		(Not Connected)

B.1.3 Origin200 to Indy and Indigo2 Cable (DB-9 to DIN-8)

This connects Silicon Graphics Indy and Indigo2 workstations to an Origin200.

Table B-3 shows the cable connector pin assignments.

Table B-3 Cable Connector Pin Assignments for an Origin200 To Indy and Indigo2 Serial Cable

Pin Number (DB-9 Female)	Signal	Pin Number (DIN-8 Male)	Signal
1	Data Carrier Detect (DCD)	1	DTR
2	Receive Data (RXD)	3	TXD
3	Transmit Data (TXD)	5	RXD
4	Data Terminal Ready (DTR)	7	DCD
5	Ground (GND)	4	GND
6	Data Set Ready (DSR)	N/C	N/C
7	Request To Send (RTS)	2	CTS
8	Clear To Send (CTS)	6	RTS
9	(Not Connected)		

B.1.4 Origin200 to O2, Onyx2, and IBM-Compatible (DB-9 to DB-9)

This connects an Origin200 to Silicon Graphics O2 and Onyx2 workstations, and IBM-compatibles with a DB-9 serial port.

Table B-4 shows the cable connector pin assignments.

Table B-4 Cable Connector Pin Assignments for an Origin200 To O2, Onyx2, and IBM-Compatible Serial Cable

Pin Number (DB-9 Female)	Signal	Pin Number (DB-9 Female)	Signal
1	Data Carrier Detect (DCD)	4	DTR
2	Receive Data (RXD)	3	TXD
3	Transmit Data (TXD)	2	RXD
4	Data Terminal Ready (DTR)	1	DCD
5	Ground (GND)	5	GND
6	Data Set Ready (DSR)		N/C
7	Request To Send (RTS)	8	CTS
8	Clear To Send (CTS)	7	RTS
9	(Not Connected)		

B.1.5 Origin200 to Onyx (DB-9 to DB-9)

This connects an Onyx to the Origin200. Notice that the Onyx DB-9 pin assignments are different from the Origin200 DB-9 pin assignments.

Table B-5 shows the cable connector pin assignments.

Table B-5 Cable Connector Pin Assignments for an Origin200 to Onyx Serial Cable

Pin Number (DB-9 Female)	Signal	Pin Number (DB-9 Male)	Signal
1	Data Carrier Detect (DCD)	9	DTR
2	Receive Data (RXD)	2	TXD
3	Transmit Data (TXD)	3	RXD
4	Data Terminal Ready (DTR)	8	DCD
5	Ground (GND)	7	GND
6	Data Set Ready (DSR)	N/C	N/C
7	Request To Send (RTS)	5	CTS
8	Clear To Send (CTS)	4	RTS
9	(Not Connected)	N/C	N/C

B.1.6 Origin200 to Macintosh Cable (DB-9 to DIN-8)

This cable connects any Macintosh to the Origin200.

Table B-6 shows the cable connector pin assignments.

Table B-6 Cable Connector Pin Assignments for an Origin200 to Macintosh Serial Cable

Pin Number (DB-9 Female)	Signal	Pin Number (DIN-8 Male)	Signal
1	Data Carrier Detect (DCD)	8	RXD+
2	Receive Data (RXD)	3	TXD–
3	Transmit Data (TXD)	5 7	RXD– GPi
4	Data Terminal Ready (DTR)	6	TXD+
5	Ground (GND)	4	GND
6	Data Set Ready (DSR)	N/C	N/C
7	Request To Send (RTS)	2	HSKi
8	Clear To Send (CTS)	1	HSKo
9	(Not Connected)		

B.2 AUX Port Cables

The Origin200 AUX port is an 8-pin, mini-DIN connector and uses the standard RS-232 serial protocol. The next sections describe cables you can use to connect a terminal or modem to the diagnostic port.

B.2.1 AUX Port Terminal Cable

Use this cable to connect the Origin200 AUX port to a terminal. Note that this cable is identical to the one used to attach a terminal to a Silicon Graphics Indy, Indigo, or Indigo2 workstation and CHALLENGE S server. The cable is available as Silicon Graphics part number 018-8114-001.

Table B-7 shows the cable connector pin assignments.

Table B-7 Connector Pin Assignments for an AUX Port Terminal Cable

Pin Number DIN-8 Connector (Male)	Pin Number DB-25 Connector (Male)	Signal
1	N/C	
2	N/C	
3	3	Transmit Data (TXD)
4	7	Ground (GND)
5	2	Receive Data (RXD)
6	N/C	
7	N/C	
8	7	Ground (GND)

B.2.2 AUX Port Modem Cable

Use this cable to connect the Origin200 AUX port to a modem. Note that this cable is identical to the one use to attach a modem to a Silicon Graphics Indy, Indigo, or Indigo2 workstation and CHALLENGE S server. The cable is available as Silicon Graphics part number 018-8109-001.

Table B-8 shows the cable connector pin assignments.

Table B-8 Connector Pin Assignments for an AUX Port Modem Cable

Pin Number DIN-8 Connector (Male)	Pin Number DB-25 Connector (Male)	Signal
1	20	Data Terminal Ready (DTR)
2	5	Clear To Send (CTS)
3	2	Transmit Data (TXD)
4	7	Ground (GND)
5	3	Receive Data (RXD)
6	4	Request To Send (RTS)
7	8	Data Carrier Detect (DCD)
8	7	Ground (GND)
N/C	1	
N/C	6	